28

BALDOR • MASKA PRODUCT CATALOG

CA6000
Effective Date:
January 2012

BALDOR®
A MEMBER OF THE ABB GROUP

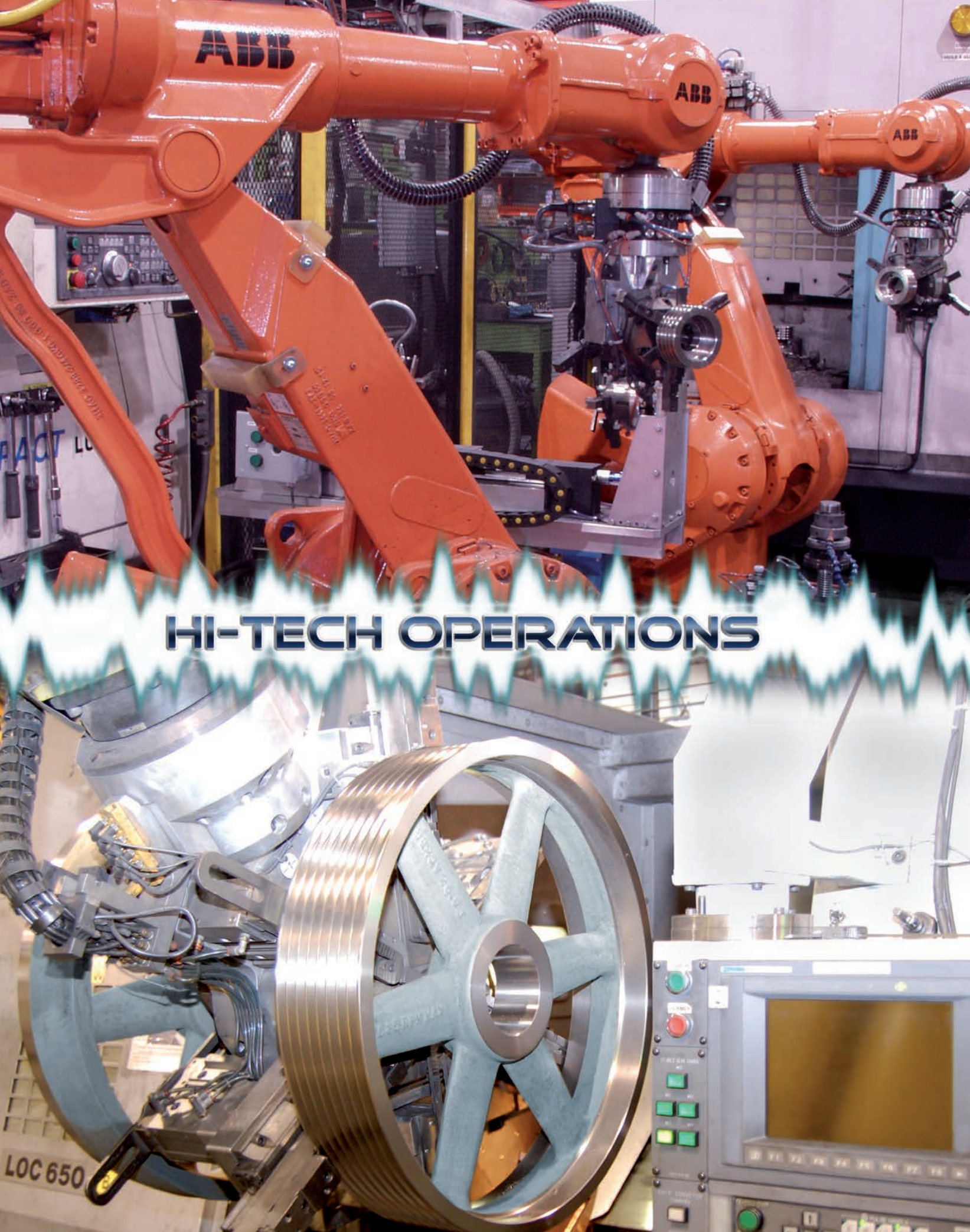

HI-TECH OPERATIONS

BALDOR • MASKA

Baldor Keeps you **Connected**

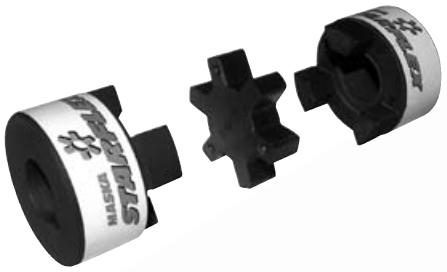

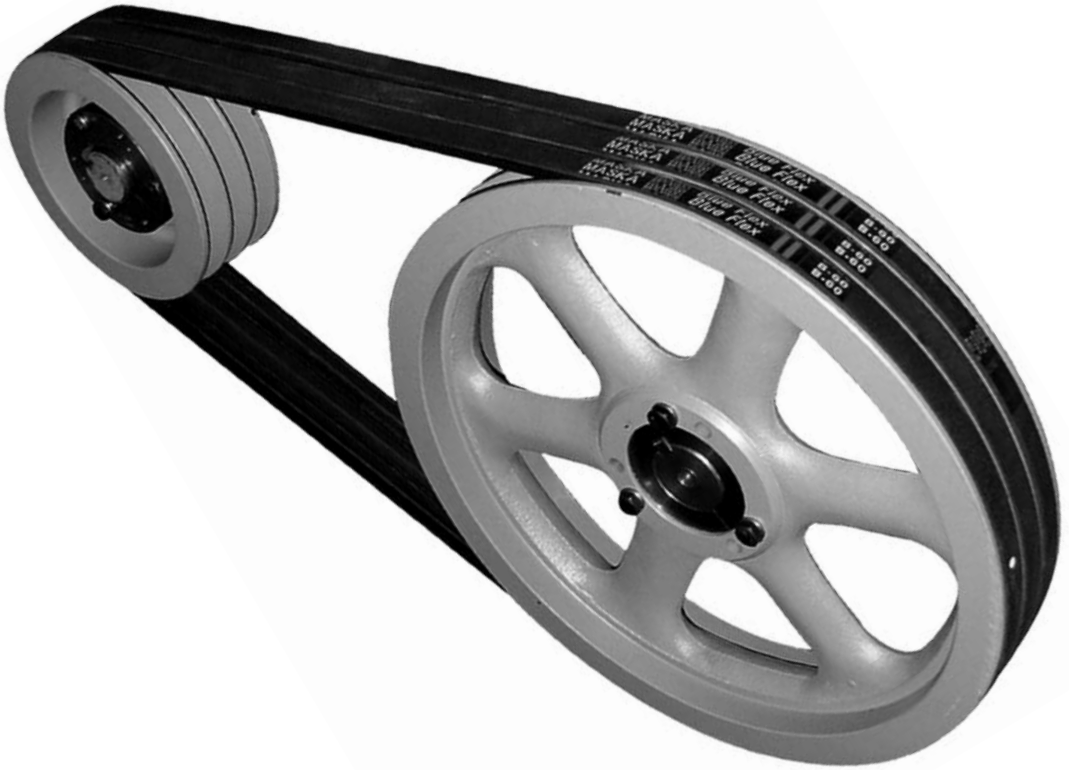

www.baldor.com
www.maskapulleys.com

BALDOR®

A MEMBER OF THE ABB GROUP

SPECIAL APPLICATIONS & MTO (MADE-TO-ORDER) PRODUCTS

Baldor•Maska® Products keep showing up EVERYWHERE.

And Baldor's flexibility allows us to meet your needs in ductile or grey cast iron for your special or custom pulleys. See the inside back cover for more information on Baldor's capabilities for large parts.

Air Handling

Complete line of adjustable sheaves in stock. Value-added "kitting" of V-Belt drive components.

Mining

Inertia wheels, deep groove sheaves, and up to 98" available upon request.

Wood Processing

HTD sprockets & ductile sheaves complement our standard product line.

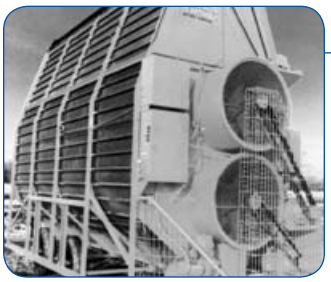

Agriculture

Hubs, cast sprockets & idler pulleys are among our many agri-MTO parts.

Aggregate

Specialized deep groove sheaves.

QD style available in ductile and/or dynamically balanced upon request.

Oilfield

Oilfield machinery, such as mud pumps, use traction motors that require a special hub for a shrink-fit.

Baldor•Maska now has several GE 752 Series sheaves in stock, as well as the driven Off-Set series, with W & S bushings.

Air Compressors & Pumps

Fin type flywheel sheaves with taper or other bore styles.

Seeing as every MTO is unique, Baldor does not have a pre-established evaluation scale.
We will rather give every request our personalized consideration.

MTO form available in PDF format at http://www.maskapulleys.com, tab "Products" - "Request Quote"

BALDOR
A MEMBER OF THE ABB GROUP

Benefit from a host of time-saving services with many on-line features.

1. The BaldorVIP On-line Tool for both OEMS &Distributors!

Reliable real-time data that offers our valued customers effective solutions to be more effective and productive.

BaldorVIP ADVANTAGES:

- Order Entry & Order Status
- Inventory Check
- Account Activity Reports
- EDI Orders using your part numbers
- Cross References

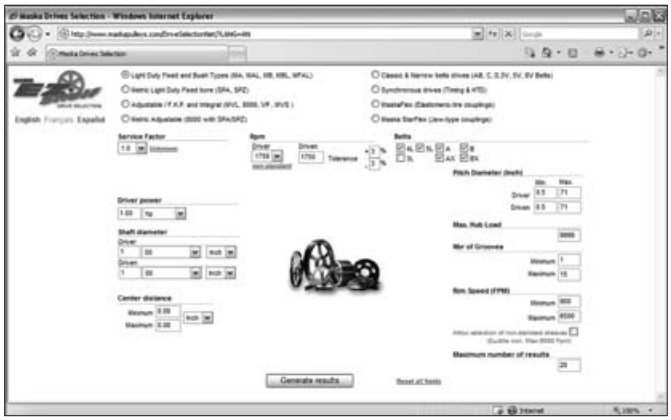

2. DRIVE SELECTION PROGRAM

OEM:
Welcome to a world where complicated formulas and engineering tables are a thing of the past, when it comes to selecting the right V belt drive components.

DISTRIBUTORS:
It isn't always easy helping your customers determine their requirements for PT components. Now, selecting the right drive has never been easier!

FEATURES:
- Improved accuracy, quicker, easier & includes cross references
- Direct access to Baldor•Maska® catalog
- Print it, fax it or e-mail the results with just ONE click

3. CAD DRAWINGS
Consult or download 2D & 3D drawings of Baldor•Maska® standard product line without cost.

4. e-CATALOG
Find Cross References quickly & easily.

5. PDF CATALOG
Consult our print catalog in an easily readable format.

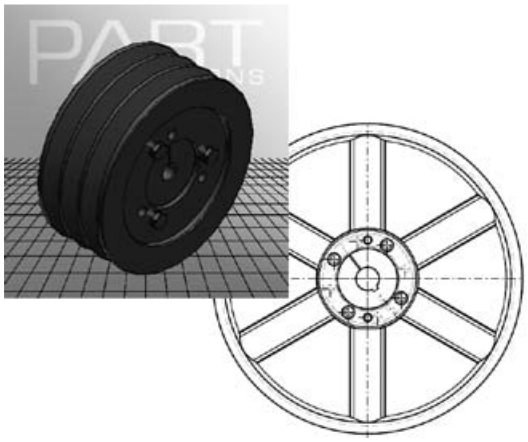

Find at www.maskapulleys.com

INDEX

Page #

PROMOTIONAL ITEMS

Product Display Units
Four-sided Floor Model 3
Wall Mount Model 4
V-Belt Drive Accessories
V-Belt Tension Meter 5
Sheave & Belt Gage 6

BUSHINGS & HUBS

QD Bushings 7-15
BK2 Bushings 16-17
Taper-lock Bushings 18-22
“Short” QD Bushings 23
QD Weld-on Hubs 24-25
XT Bushings 26-27
XT Hubs 28

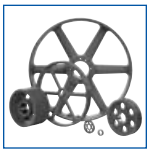

SHEAVES

General Sheaves Information. 29-34
Light Duty: MA, MB, MAL, MBL 35-44
Fractional Fixed Bore: MFAL 45-46
Step Pulleys: MAS 47-48
Reducer Bushings 49
Adjustable Pitch: MVL, 8000 Series, VP Series, MVS 50-60
Classical Sections: A/B Combination, C, D 61-84
Narrow Sections: 3V, 5V, 8V 85-106

NOTE: All dimensions are subject to change without prior notice.

INDEX

Page #

SYNCHRONOUS DRIVES

General Synchronous Information 107
Timing Pulleys 108-116
HTD Sprockets 117-126

COUPLINGS

General Couplings Information 127-132
Maska Starflex: Elastomeric jaw type 133-146
4-Flex: Elastomeric gear type 147-161
Maskaflex: Elastomeric tire type 162-168

BELTS

General Belts Information 169-172
Classical V-belts - A, B, C Section 173-175
Classical cogged, Narrow & Narrow cogged 176-180
Link V-belts 179
Synchronous: Trapezoidal (Timing) & Curvilinear (H.T.B.) 181-186

CROSS REFERENCES

Listing 186-189

TERMS & CONDITIONS are located on the Company's web site at
www.baldor.com

PTDA MPTA

NOTE: All dimensions are subject to change without prior notice.

PROMOTIONAL

4-SIDED FLOOR MODEL

TOP 17" X 17"

HEIGHT 48"
BOTTOM 22" X 22"

Attractive 4-sided floor model allows you to display Baldor•Maska® popular sizes of single and double groove light duty cast iron sheaves, and accompanying QD bushings. All hardware, mounting instructions and labels are included.

DESCRIPTION	PRODUCT #:
Display Stand only	DIS-4S-STAND
Parts	DIS-4S-ITEMS
Parts & Stand	DIS-4S-COMPLETE

LIST PRICE

Display Stand only:	$300.00
Display Stand (bought with the parts):	$150.00
Parts:	$2,427.50
Combined Cost:	$2,577.50

APPROX. WEIGHT:

Display Stand	93 lbs.
Parts	242 lbs.
TOTAL	**337 lbs.**

SIDE 1: Fixed bore sheaves "A" Belt

Part No.	Size/Qty 1/2	5/8	7/8		List Price	Extension
MA 20	2	2	2	= 6	$8.32	$49.92
MA 25	2	2	2	= 6	9.60	57.60
MA 30	2	2	2	= 6	11.88	71.28
MA 35	2	2	2	= 6	13.32	79.92
MA 40	2	2	2	= 6	19.16	114.96
MA 45	2	2	2	= 6	20.56	123.36
MA 50	2	2	2	= 6	21.92	131.52
TOTAL:				42		$628.56

SIDE 2: Fixed bore sheaves "B" Belt

Part No.	Size/Qty 1/2	5/8	7/8		List Price	Extension
MB 20	2	2	2 (3/4)	= 6	$11.25	$67.50
MB 25	2	2	2	= 6	12.00	72.00
MB 30	2	2	2	= 6	13.20	79.20
MB 35	2	2	2	= 6	18.08	108.48
MB 40	2	2	2	= 6	20.56	123.36
MB 45	2	2	2	= 6	22.72	136.32
MB 50	2	2	2	= 6	23.12	138.72
TOTAL:				42		$725.58

SIDE 3: Bush type sheaves "A-B" Belts

Part No.	Qty	List Price	Extension
MBL 31	2	$21.68	$43.36
MBL 33	2	23.06	46.12
MBL 35	2	23.10	46.20
MBL 37	2	23.28	46.56
MBL 39	2	23.34	46.68
MBL 44	2	24.36	48.72
MBL 47	2	24.92	49.84
MBL 49	2	25.44	50.88
MBL 54	2	26.46	52.92
MBL 57	2	26.76	53.52
MBL 59	2	28.20	56.40
MBL 64	2	30.96	61.92
MBL 69	2	33.52	67.04
MBL 77	1	35.96	35.96
MBL 87	1	42.48	42.48
MBL 97	1	47.44	47.44
MBL 107	1	52.16	52.16
MBL 127	1	63.16	63.16
TOTAL:	31		$911.36

SIDE 4: Bushings

Part No.	Qty	List Price	Extension
L X 1/2	2	$9.00	$18.00
L X 5/8	2	9.00	18.00
L X 3/4	2	9.00	18.00
L X 7/8	2	9.00	18.00
L X 1	2	9.00	18.00
L X 1 1/8	2	9.00	18.00
L X 1 1/4	2	9.00	18.00
L X 1 3/8	2	9.00	18.00
L X 1 3/16	2	9.00	18.00
TOTAL:	18		$162.00

TOTAL LIST PRICE OF PARTS: $2,427.50
(without displayboard)

WALL MODEL

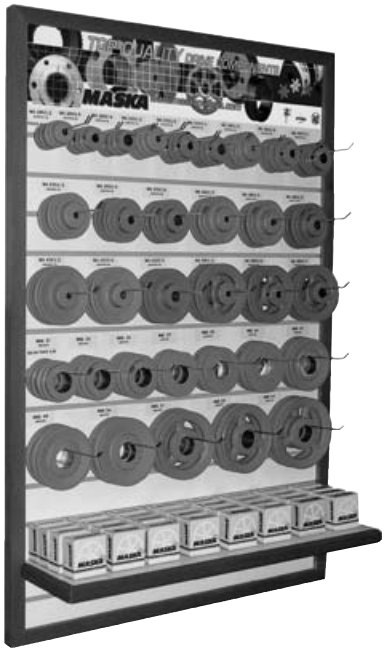

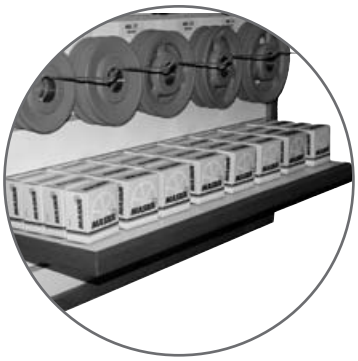

This 1-sided wall unit, with a detachable bottom shelf, is offered with a selection of our popular light-duty sheaves & QD bushings.

Or you can "Do-it-yourself" and put together a display with your best-selling Baldor•Maska® products.

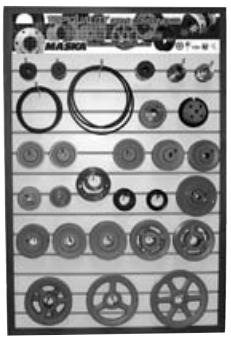

(Example)

48"h X 33"w
hardware to attach to wall not included.

1. Light-Duty Sheaves & Bushings
   Includes board, shelf, parts, pegs & labels:
   DIS-W1-COMPLETE (items listed on facing page)
2. Do-it-yourself
   Includes board, shelf and 40 4" pegs:
   DIS-W-BOARD

PRODUCT #	LIST PRICE
DIS-W-BOARDSHELF	$225.00
DIS-W1-ITEMS	$1,519.68
DIS-W1-COMPLETE	$1,744.68

Parts List

FIXED BORE SHEAVES, "A" BELT

Part No.	Size/Qty.				List Price	Total
	1/2	5/8	7/8			
MA 20	2	2	2	= 6	$ 8.32	$ 49.92
MA 25	2	2	2	= 6	9.60	57.60
MA 30	2	2	2	= 6	11.88	71.28
MA 35	2	2	2	= 6	13.32	79.92
MA 40	2	2	2	= 6	19.16	114.96
MA 45	2	2	2	= 6	20.56	123.36
MA 50	2	2	2	= 6	21.92	131.52
				42		$628.56

QD BUSHINGS

Part No.	Qty.	List Price	Total
L X 1/2	4	$ 9.00	$ 36.00
L X 5/8	4	9.00	36.00
L X 3/4	4	9.00	36.00
L X 7/8	4	9.00	36.00
L X 1	4	9.00	36.00
L X 1-1/8	4	9.00	36.00
L X 1-1/4	4	9.00	36.00
L X 1-3/8	4	9.00	36.00
	32		$288.00

BUSH TYPE SHEAVES, "A-B" BELT

Part No.	Qty.	List Price	Total
MBL 31	2	$ 21.68	$ 43.36
MBL 33	2	23.06	46.12
MBL 35	2	23.10	46.20
MBL 37	2	23.28	46.56
MBL 39	2	23.34	46.68
MBL 44	2	24.36	48.72
MBL 47	2	24.92	49.84
MBL 49	2	25.44	50.88
MBL 54	2	26.46	52.92
MBL 57	2	26.76	53.52
MBL 59	2	28.20	56.40
MBL 64	2	30.96	61.92
	24		$603.12

TOTAL LIST PRICE OF WALL MODEL PARTS: **$1,519.68**

PROMOTIONAL

Indispensable tools for maintenance mechanics to ensure efficient, cost-saving operations.

V-BELT TENSION METER

Part No. 006347
Call for pricing.

DID YOU KNOW THAT...

- Improper belt tension, either too tight or too loose, can result in belt drive problems. For critical drives, a manual verification is insufficient.

IMPORTANT REMINDER

- Belts that are too loose will slip, causing excessive belt and sheave wear.
- Sagging belts can snap during start-up or during peak loads.
- Belts that are too tight can damage bearings.
- Both situations reduce power transmission performance levels. Proper tension and installation can lengthen belt life and lessen expensive downtime.

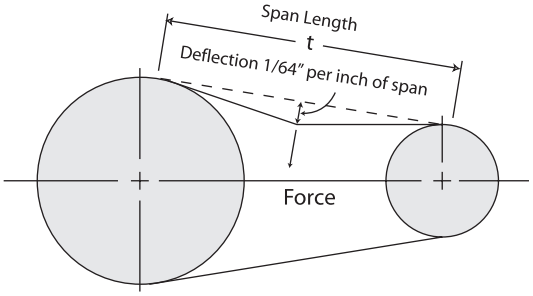

This indispensable maintenance tool is a handy way of checking belt tension on single strand belts up to 1" wide within the ranges listed below. Scales are provided for checking the required force and the belt deflection distance.

For use with all small V-belt and synchronous drives.

Comes in a protective plastic tube with instructions.

Force Range:	0-35 lbs.	0-15.9 kg.
Tension Range:	0-560 lbs.	0-255 kg.

PROMOTIONAL

SHEAVE & BELT GAGE

Part No. 006346
Call for pricing.

DID YOU KNOW THAT...

- You can also use these gages to determine the corresponding belt that fits with each sheave. Find the gage that fits, depending on size (groove must not be worn), and it will indicate the belt type.
- The belt gages help you determine the proper belt section; just insert the old belt in the "V" to determine belt cross section.

IMPORTANT REMINDER

- Inspect sheaves often for optimal operating efficiency. Worn grooves cause one or more belts to ride lower than the others, known as "differential driving", resulting in premature wearing of belts and reduced performance levels.
- Rounded sheave sidewalls ruin belts quickly by wearing their bottom corners (see illustration below). The belt's wedging action is also reduced.
- If more than 1/32" of wear is evident, reduced V-belt life will result.

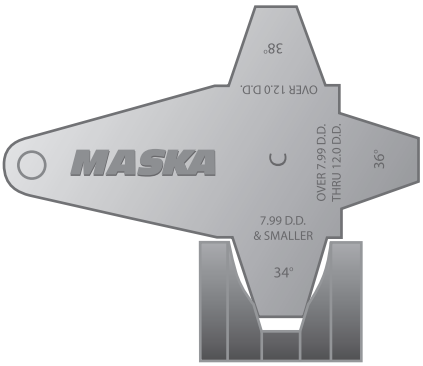

Not more than 1/32" wear

Molded plastic and color-matched with our V-belt sheaves.

9 keys for sheave' grooves and 2 for belts.

- To determine whether the sheave groove is worn, select the proper sheave gage and insert the correct angle, based on the sheave's diameter, into the groove.
- For use with all Classical, Narrow and A/B combination sheaves.

"QD" BUSHING

DID YOU KNOW THAT...

- All Bushings up to sizes M, and those with a shallow keyseat, are manufactured in DUCTILE iron, a stronger material offering numerous advantages
- All sizes have a set screw over the keyway to secure the key which is advantageous in vertical applications
- 100% interchangeable with licensed manufacturer's products
- Available in inches & metric sizes
- Available "Short" for weld-on hubs
- Full, not partial split

HOW TO ORDER

EXAMPLE: **SFX1-1/16**

SF	X1-1/16

SF: BUSHING SIZE

X1-1/16: BORE SIZE (1-1/16")
Inch bore sizes are designated with the whole inch followed by the fraction. For example, a 1.5" diameter bore would be 1-1/2. Metric bore sizes are designated with "MM" after the metric dimension (X25MM).

TAPERED, PRECISION FIT.

Precision machining of the tapered bore in the hub of the "QD" rim and the tapered mating surface of the bushing insures a snug, precision fit between rim and bushing. Tightening the cap screws draws the sheave up tight on the bushing - Baldor•Maska® "QD" Bushings and Sheaves are true running.

FULL - NOT PARTIAL SPLIT.

This feature, together with the tapered, precision fit of rim and bushing, enables the "QD" Bushing to compress evenly through the overall bushing length, thus gripping the shaft with tremendous pressure, the equivalent of a press fit on the shaft. And the full split makes it just as easy to install "QD" Sheaves on all standard size shafts as it is to install them on shafts which may be slightly oversized or slightly undersized.

EASY TO INSTALL, EASY TO REMOVE.

To install Baldor•Maska® "QD" Sheaves, the cap screws are used as pull-wrench only - no additional leverage is necessary. To remove "QD" Sheaves, the cap screws are taken out and used as jack screws. A few quick turns on each screw, and the tight grip of the bushing on the shaft is easily broken.

SET SCREW OVER THE KEY.

Once the correct position of the "QD" Sheave on the shaft is determined, tightening the set screw in the bushing flange down on the key will hold the bushing in this position while the pull-up bolts are tightened. This set screw holds the key in place on the shaft during drive operation - an especially desirable feature on drives that have vertical shafts facing down. Available on all "QD" bushings except W AND S.

FULLY INTERCHANGEABLE WITH OTHER "QD" BUSHINGS.

As in the case of Baldor•Maska® "QD" Sheaves, the "QD" Bushings also conform to standardized "QD" dimensions and sheave types. Because of this feature, any "QD" Stock Bushing may be interchanged with the same size bushing that other "QD" manufacturers produce.

"QD" bushings is a registred trademark and manufactured by Baldor under license.

"QD" BUSHING MOUNTING

DID YOU KNOW THAT...

- QD Bushings can be mounted either way
- Capscrews are always accessible from the outside

IMPORTANT REMINDER

DRY MOUNTING: Do not use lubricants or antiseize compounds on bushing and hub mounting area.

STANDARD MOUNTING

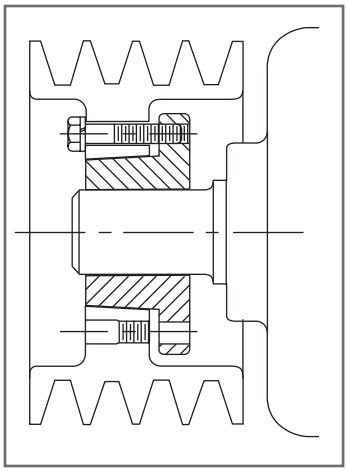

STANDARD - BUSHING FLANGE TOWARD MACHINE OR MOTOR

1. Align tapped holes in bushing flange with drilled holes in sheave hub.
2. Insert capscrews through drilled holes in sheave hub and thread loosely into tapped holes in bushing flange.
3. Position assembly on shaft and tighten capscrews progressively and uniformly.

TO REMOVE

1. Remove capscrews and thread into tapped holes in sheave hub. Tighten progressively until bushing is free from sheave taper.
2. Remove assembly from shaft.

REVERSE MOUNTING

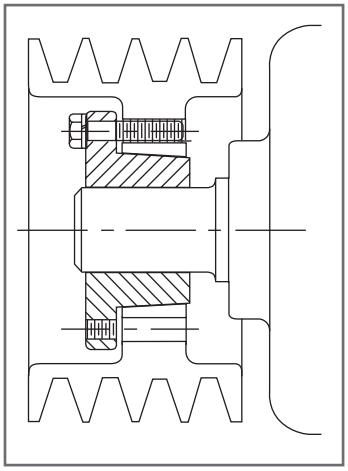

REVERSE - BUSHING FLANGE AWAY FROM MACHINE OR MOTOR

1. Align drilled holes in bushing flange with tapped holes in sheave hub.
2. Insert capscrews through drilled holes in bushing flange and thread loosely into tapped holes in sheave hub.
3. Position assembly on shaft and tighten capscrews progressively and uniformly.

TO REMOVE

1. Remove capscrews and thread into tapped holes in bushing flange. Tighten progressively until bushing is free from sheave taper.
2. Remove assembly from shaft.

"QD" BUSHING PROPER WRENCH TORQUE

TIGHTENING "IMPORTANT"

Tighten screws evenly and progressively. Never allow the sheave to be drawn in contact with the flange of the bushing. If extreme screw tightening forces are applied, excess pressures will be created in the hub of the mounted sheave which may cause it to crack.

PROPER WRENCH TORQUE TO TIGHTEN SCREWS

Bushing Size	Screw size Inches	Torque Wrench Ft-Lbs	Open end or socket wrench		Torque Capacity In-Lbs
			Length Inches	Pull (LBS)	
L	1/4	6	4	18	1,200
JA	# 10	5	4	15	1,000
SH	1/4	9	4	27	3,500
SDS-SD	1/4	9	4	27	5,000
SK	5/16	15	6	30	7,000
SF	3/8	30	6	60	11,000
E	1/2	60	12	60	20,000
F	9/16	75	12	75	30,000
J	5/8	135	15	108	45,000
M	3/4	225	15	180	85,000
N	7/8	300	15	240	150,000
P	1	450	18	300	250,000
W	1 1/8	600	24	300	375,000
S	1 1/4	750	30	300	625,000

SET SCREW TIGHTENING TORQUES AND AXIAL LOADS

Set Screw Size	Socket / Allen Key Size (Across Flat)	Recommended Tightening Torque		Set Screw Axial Load (± 30%)			
				Cup Point		Knurled Point	
		Newton - Meter (Nm)	LBF - Inches	Newtons (N)	LBF	Newtons (N)	LBF
#10 - 24	3/32	3.62	32	1500	340	2225	500
1/4 - 20	1/8	6.8	60	2500	560	3650	820
5/16 - 18	5/32	12.4	110	3500	785	5110	1150
3/8 - 16	3/16	22.6	200	4500	1010	6580	1480
1/2 - 13	1/4	45.2	400	9000	2025	13230	2975
5/8 - 11	5/16	97.2	860	12000	2720	17800	4000

Note: For axial loads in excess of the values listed, a shouldered shaft against the face of the inner ring is recommended.

"QD" BUSHINGS BORE AND KEYSEAT DIMENSIONS

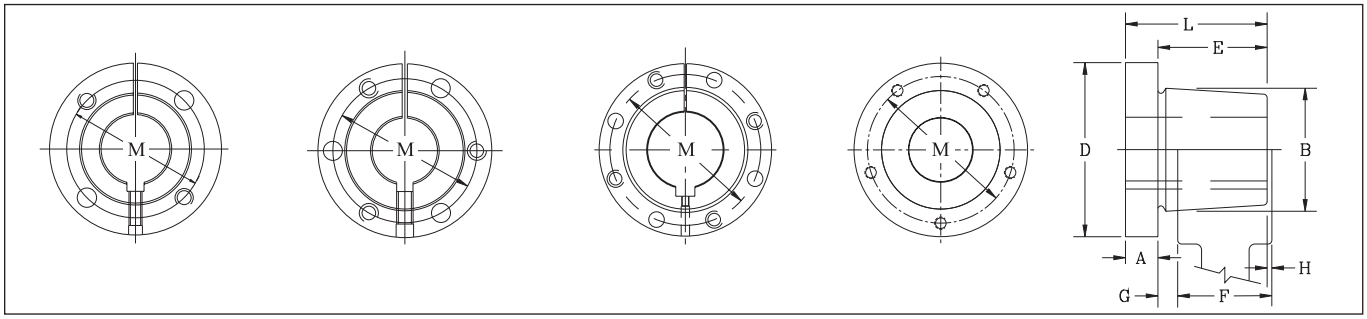

Bushing "L" ("H" - Cross Reference) | Bushing "JA to J" Inclusive | Bushing "M to W" Inclusive | Bushing "S" | Taper 3/4" per FT on Diameter - B -

DIMENSIONS

Bushing Size	List Price $	Dimensions - Inches									Cap Screws Required NC Grade 5	Set Screw Dimensions	Bore Range	
		A	B	D	E	F	G	H	L	Bolt Circle M			Min.	Max.
L	9.00	11/32	1 5/8	2 1/2	1	29/32	3/16	3/32	1 11/32	2	2=1/4X7/8	10-24 UNC x 1/4"	3/8	1 1/2
JA	10.90	5/16	1 3/8	2	11/16	5/8	13/64	9/64	1	1 21/32	3=10-24X1	10-24 UNC x 1/4"	1/2	1 1/4
SH	14.90	3/8	1 7/8	2 11/16	7/8	3/4	1/4	1/8	1 1/4	2 1/4	3=1/4X1 3/8	1/4-20 UNC x 1/4"	1/2	1 11/16
SDS	17.30	7/16	2 3/16	3 3/16	7/8	3/4	1/4	1/8	1 5/16	2 11/16	3=1/4X1 3/8	1/4-20 UNC x 1/4"	1/2	2
SD	20.80	7/16	2 3/16	3 3/16	1 3/8	1 1/4	1/4	1/8	1 13/16	2 11/16	3=1/4X1 7/8	1/4-20 UNC x 1/4"	1/2	2
SK	26.80	1/2	2 13/16	3 7/8	1 3/8	1 1/4	5/16	3/16	1 7/8	3 5/16	3=5/16X2	1/4-20 UNC x 1/4"	1/2	2 5/8
SF	33.00	1/2	3 1/8	4 5/8	1 1/2	1 1/4	5/16	1/16	2	3 7/8	3=3/8X2	5/16-18 UNC x 3/8"	1/2	2 15/16
E	69.20	3/4	3 27/32	6	1 7/8	1 5/8	5/16	1/16	2 5/8	5	3=1/2X2 3/4	3/8-16 UNC x 3/8"	7/8	3 1/2
F	128.00	13/16	4 7/16	6 5/8	2 13/16	2 1/2	13/32	3/32	3 5/8	5 5/8	3=9/16X3 5/8	3/8-16 UNC x 3/8"	1	4
J	160.00	1	5 5/32	7 1/4	3 1/2	3 3/16	13/32	3/32	4 1/2	6 1/4	3=5/8X4 1/2	3/8-16 UNC x 3/8"	1 7/16	4 1/2
M	320.00	1 1/4	6 1/2	9 1/8	5 1/2	5 3/16	13/32	3/32	6 3/4	7 7/8	4=3/4X7	3/8-16 UNC x 1/2"	2	5 1/2
N	560.00	1 1/2	7	10	6 5/8	6 1/4	9/16	3/16	8 1/8	8 1/2	4=7/8X8	1/2-13 UNC x 5/8"	2 3/4	6
P	840.00	1 3/4	8 1/4	11 3/4	7 5/8	7 1/4	5/8	1/4	9 3/8	10	4=1X9 1/2	5/8-11 UNC x 1 1/4"	2 15/16	7
W	1480.00	2	10 7/16	15	9 3/8	9	5/8	1/4	11 3/8	12 3/4	4=1 1/8X11 1/2	1-8 UNC x 1 1/2"	4 1/4	8-1/2
S	3480.00	3 1/4	12 1/8	17 3/4	12 1/2	12	13/16	5/16	15 3/4	15	5=1 1/4X15 1/2	1 1/4-7 UNC x 2"	5 1/2	10
SX5**	3132.00	3 1/4	12 1/8	17 3/4	12 1/2	12	13/16	5/16	15 3/4	15	5=1 1/4X15 1/2	1 1/4-7 UNC x 2"	-	-
SX7-1/2**	3132.00	3 1/4	12 1/8	17 3/4	12 1/2	12	13/16	5/16	15 3/4	15	5=1 1/4X15 1/2	1 1/4-7 UNC x 2"	-	-

Refer to page 10 for Cap screw torque ratings Note: Approx. weight in lbs. for an average size bore. ** RB = Rough bore

BALDOR
A MEMBER OF THE ABB GROUP

Note: Tapered Bushings are available from stock in all bores and keyseats listed. In some cases, as the bore increases in diameter, a shallow keyseat is provided - due to insufficient metal thickness. When this happens, Baldor furnishes the correct rectangular key (inches or imperial bore only). This does not affect the bushing's ability to transmit the load. The rectangular key, or flat key as some call it, fits into the standard keyway in the shaft. **Keys not supplied for standard keyseat dimension.**

QD BUSHINGS STANDARD STOCK BORES (INCHES)

	Bushing #	Keyseat	Key	Wt
L	LX3/8	No. K.S.	---	1.1
L	LX7/16	No. K.S.	---	1.1
L	LX1/2	1/8 X 1/16	1/8 X 1/8	1.0
L	LX9/16	1/8 X 1/16	1/8 X 1/8	1.0
L	LX5/8	3/16 x 3/32	3/16 X 3/16	0.9
L	LX11/16	3/16 x 3/32	3/16 X 3/16	0.9
L	LX3/4	3/16 x 3/32	3/16 X 3/16	1.0
L	LX13/16	3/16 x 3/32	3/16 X 3/16	0.9
L	LX7/8	3/16 x 3/32	3/16 X 3/16	0.9
L	LX15/16	1/4 x 1/8	1/4 X 1/4	0.8
L	LX1	1/4 x 1/8	1/4 X 1/4	0.8
L	LX1-1/16	1/4 x 1/8	1/4 X 1/4	0.7
L	LX1-1/8	1/4 x 1/8	1/4 X 1/4	0.7
L	LX1-3/16	1/4 x 1/8	1/4 X 1/4	0.7
L	LX1-1/4	1/4 x 1/8	1/4 X 1/4	0.7
L	LX1-5/16	5/16 x 1/16**	5/16 x 7/32	0.6
L	LX1-3/8	5/16 x 1/16**	5/16 x 7/32	0.6
L	LX1-7/16	3/8 x 1/16**	3/8 X 1/4	0.6
L	LX1-1/2	3/8 x 3/64**	3/8 x 15/64	0.5
JA	JAX1/2	1/8 x 1/16	1/8 X 1/8	0.5
JA	JAX9/16	1/8 x 1/16	1/8 X 1/8	0.5
JA	JAX5/8	3/16 x 3/32	3/16 X 3/16	0.5
JA	JAX11/16	3/16 x 3/32	3/16 X 3/16	0.5
JA	JAX3/4	3/16 x 3/32	3/16 X 3/16	0.5
JA	JAX13/16	3/16 x 3/32	3/16 X 3/16	0.4
JA	JAX7/8	3/16 x 3/32	3/16 X 3/16	0.4
JA	JAX15/16	1/4 x 1/8	1/4 X 1/4	0.4
JA	JAX1	1/4 x 1/8	1/4 X 1/4	0.4
JA	JAX1-1/16	1/4 x 1/16**	1/4 X 3/16	0.4
JA	JAX1-1/8	1/4 x 1/16**	1/4 X 3/16	0.4
JA	JAX1-3/16	1/4 x 1/16**	1/4 X 3/16	0.3
JA	JAX1-1/4	1/4 x 1/32**	1/4 X 5/32	0.3
SH	SHX1/2	1/8 x 1/16	1/8 X 1/8	1.2
SH	SHX9/16	1/8 x 1/16	1/8 X 1/8	1.1
SH	SHX5/8	3/16 x 3/32	3/16 X 3/16	1.2
SH	SHX11/16	3/16 x 3/32	3/16 X 3/16	1.1
SH	SHX3/4	3/16 x 3/32	3/16 X 3/16	1.1
SH	SHX13/16	3/16 x 3/32	3/16 X 3/16	1.1
SH	SHX7/8	3/16 x 3/32	3/16 X 3/16	1.1
SH	SHX15/16	1/4 x 1/8	1/4 X 1/4	1.0
SH	SHX1	1/4 x 1/8	1/4 X 1/4	1.0
SH	SHX1-1/16	1/4 x 1/8	1/4 X 1/4	0.9
SH	SHX1-1/8	1/4 x 1/8	1/4 X 1/4	0.9
SH	SHX1-3/16	1/4 x 1/8	1/4 X 1/4	0.9
SH	SHX1-1/4	1/4 x 1/8	1/4 X 1/4	0.8
SH	SHX1-5/16	5/16 x 5/32	5/16 X5/16	0.8
SH	SHX1-3/8	5/16 x 5/32	5/16 X5/16	0.7
SH	SHX1-7/16	3/8 x 1/8**	3/8 X 5/16	0.8
SH	SHX1-1/2	3/8 x 1/16**	3/8 X 1/4	0.7
SH	SHX1-9/16	3/8 x 1/16**	3/8 X 1/4	0.7
SH	SHX1-5/8	3/8 x 1/16**	3/8 X 1/4	0.6
SH	SHX1-11/16	No K.S.	---	0.5
SDS	SDSX1/2	1/8 x 1/16	1/8 X 1/8	1.7
SDS	SDSX9/16	1/8 x 1/16	1/8 X 1/8	1.7
SDS	SDSX5/8	3/16 x 3/32	3/16 X 3/16	1.7
SDS	SDSX11/16	3/16 x 3/32	3/16 X 3/16	1.7
SDS	SDSX3/4	3/16 x 3/32	3/16 X 3/16	1.7
SDS	SDSX13/16	3/16 x 3/32	3/16 X 3/16	1.6
SDS	SDSX7/8	3/16 x 3/32	3/16 X 3/16	1.6

	Bushing #	Keyseat	Key	Wt
SDS	SDSX15/16	1/4 x 1/8	1/4 X 1/4	1.6
SDS	SDSX1	1/4 x 1/8	1/4 X 1/4	1.5
SDS	SDSX1-1/16	1/4 x 1/8	1/4 X 1/4	1.5
SDS	SDSX1-1/8	1/4 x 1/8	1/4 X 1/4	1.5
SDS	SDSX1-3/16	1/4 x 1/8	1/4 X 1/4	1.5
SDS	SDSX1-1/4	1/4 x 1/8	1/4 X 1/4	1.4
SDS	SDSX1-5/16	5/16 x 5/32	5/16 X5/16	1.3
SDS	SDSX1-3/8	5/16 x 5/32	5/16 X5/16	1.3
SDS	SDSX1-7/16	3/8 x 3/16	3/8 X 3/8	1.2
SDS	SDSX1-1/2	3/8 x 3/16	3/8 X 3/8	1.2
SDS	SDSX1-9/16	3/8 x 3/16	3/8 X 3/8	1.1
SDS	SDSX1-5/8	3/8 x 3/16	3/8 X 3/8	1.1
SDS	SDSX1-11/16	3/8 x 1/8**	3/8 X 5/16	1.1
SDS	SDSX1-3/4	3/8 x 1/8**	3/8 X 5/16	1.1
SDS	SDSX1-13/16	1/2 x 1/8**	1/2 X 3/8	1.0
SDS	SDSX1-7/8	1/2 x 1/16**	1/2 X 5/16	1.0
SDS	SDSX1-15/16	1/2 x 1/16**	1/2 X 5/16	0.9
SDS	SDSX2	No K.S.	---	0.8
SD	SDX1/2	1/8 x 1/16	1/8 X 1/8	2.2
SD	SDX9/16	1/8 x 1/16	1/8 X 1/8	2.1
SD	SDX5/8	3/16 x 3/32	3/16 X 3/16	2.1
SD	SDX11/16	3/16 x 3/32	3/16 X 3/16	2.1
SD	SDX3/4	3/16 x 3/32	3/16 X 3/16	2.1
SD	SDX13/16	3/16 x 3/32	3/16 X 3/16	2.1
SD	SDX7/8	3/16 x 3/32	3/16 X 3/16	2.0
SD	SDX15/16	1/4 x 1/8	1/4 X 1/4	1.9
SD	SDX1	1/4 x 1/8	1/4 X 1/4	1.9
SD	SDX1-1/16	1/4 x 1/8	1/4 X 1/4	1.9
SD	SDX1-1/8	1/4 x 1/8	1/4 X 1/4	1.8
SD	SDX1-3/16	1/4 x 1/8	1/4 X 1/4	1.7
SD	SDX1-1/4	1/4 x 1/8	1/4 X 1/4	1.7
SD	SDX1-5/16	5/16 x 5/32	5/16 X5/16	1.6
SD	SDX1-3/8	5/16 x 5/32	5/16 X5/16	1.6
SD	SDX1-7/16	3/8 x 3/16	3/8 X 3/8	1.6
SD	SDX1-1/2	3/8 x 3/16	3/8 X 3/8	1.5
SD	SDX1-9/16	3/8 x 3/16	3/8 X 3/8	1.4
SD	SDX1-5/8	3/8 x 3/16	3/8 X 3/8	1.3
SD	SDX1-11/16	3/8 x 1/8**	3/8 X 5/16	1.3
SD	SDX1-3/4	3/8 x 1/8**	3/8 X 5/16	1.2
SD	SDX1-13/16	1/2 x 1/8**	1/2 X 3/8	1.2
SD	SDX1-7/8	1/2 x 1/16**	1/2 X 5/16	1.1
SD	SDX1-15/16	1/2 x 1/16**	1/2 X 5/16	1.0
SD	SDX2	No K.S.	---	0.8
SK	SKX1/2	1/8 x 1/16	1/8 X 1/8	3.7
SK	SKX9/16	1/8 x 1/16	1/8 X 1/8	3.6
SK	SKX5/8	3/16 x 3/32	3/16 X 3/16	3.6
SK	SKX11/16	3/16 x 3/32	3/16 X 3/16	3.6
SK	SKX3/4	3/16 x 3/32	3/16 X 3/16	3.6
SK	SKX13/16	3/16 x 3/32	3/16 X 3/16	3.5
SK	SKX7/8	3/16 x 3/32	3/16 X 3/16	3.5
SK	SKX15/16	1/4 x 1/8	1/4 X 1/4	3.5
SK	SKX1	1/4 x 1/8	1/4 X 1/4	3.4
SK	SKX1-1/16	1/4 x 1/8	1/4 X 1/4	3.3
SK	SKX1-1/8	1/4 x 1/8	1/4 X 1/4	3.3
SK	SKX1-3/16	1/4 x 1/8	1/4 X 1/4	3.2
SK	SKX1-1/4	1/4 x 1/8	1/4 X 1/4	3.2
SK	SKX1-5/16	5/16 x 5/32	5/16 X5/16	3.1
SK	SKX1-3/8	5/16 x 5/32	5/16 X5/16	3.1
SK	SKX1-7/16	3/8 x 3/16	3/8 X 3/8	3.0

	Bushing #	Keyseat	Key	Wt
SK	SKX1-1/2	3/8 x 3/16	3/8 X 3/8	2.9
SK	SKX1-9/16	3/8 x 3/16	3/8 X 3/8	2.8
SK	SKX1-5/8	3/8 x 3/16	3/8 X 3/8	2.8
SK	SKX1-11/16	3/8 x 3/16	3/8 X 3/8	2.7
SK	SKX1-3/4	3/8 x 3/16	3/8 X 3/8	2.6
SK	SKX1-13/16	1/2 x 1/4	1/2 X 1/2	2.5
SK	SKX1-7/8	1/2 x 1/4	1/2 X 1/2	2.4
SK	SKX1-15/16	1/2 x 1/4	1/2 X 1/2	2.3
SK	SKX2	1/2 x 1/4	1/2 X 1/2	2.2
SK	SKX2-1/16	1/2 x 1/4	1/2 X 1/2	2.1
SK	SKX2-1/8	1/2 x 1/4	1/2 X 1/2	2.0
SK	SKX2-3/16	1/2 x 1/8**	1/2 X 3/8	2.1
SK	SKX2-1/4	1/2 x 1/8**	1/2 X 3/8	1.9
SK	SKX2-1/4KW5/8	5/8 x 1/8**	5/8 X 7/16	1.9
SK	SKX2-5/16	5/8 x 1/8**	5/8 X 7/16	1.9
SK	SKX2-3/8	5/8 x 1/8**	5/8 X 7/16	1.8
SK	SKX2-7/16	5/8 x 1/16**	5/8 X 3/8	1.7
SK	SKX2-1/2	5/8 x 1/16**	5/8 X 3/8	1.6
SK	SKX2-9/16	No K.S.	---	1.3
SK	SKX2-5/8	No K.S.	---	1.2
SF	SFX1/2	1/8 x 1/16	1/8 X 1/8	5.1
SF	SFX9/16	1/8 x 1/16	1/8 X 1/8	5.0
SF	SFX5/8	3/16 x 3/32	3/16 X 3/16	5.0
SF	SFX11/16	3/16 x 3/32	3/16 X 3/16	5.0
SF	SFX3/4	3/16 x 3/32	3/16 X 3/16	5.0
SF	SFX13/16	3/16 x 3/32	3/16 X 3/16	4.9
SF	SFX7/8	3/16 x 3/32	3/16 X 3/16	4.8
SF	SFX15/16	1/4 x 1/8	1/4 X 1/4	4.8
SF	SFX1	1/4 x 1/8	1/4 X 1/4	4.8
SF	SFX1-1/16	1/4 x 1/8	1/4 X 1/4	4.7
SF	SFX1-1/8	1/4 x 1/8	1/4 X 1/4	4.7
SF	SFX1-3/16	1/4 x 1/8	1/4 X 1/4	4.6
SF	SFX1-1/4	1/4 x 1/8	1/4 X 1/4	4.7
SF	SFX1-5/16	5/16 x 5/32	5/16 X5/16	4.5
SF	SFX1-3/8	5/16 x 5/32	5/16 X5/16	4.4
SF	SFX1-7/16	3/8 x 3/16	3/8 X 3/8	4.4
SF	SFX1-1/2	3/8 x 3/16	3/8 X 3/8	4.3
SF	SFX1-9/16	3/8 x 3/16	3/8 X 3/8	4.1
SF	SFX1-5/8	3/8 x 3/16	3/8 X 3/8	4.2
SF	SFX1-11/16	3/8 x 3/16	3/8 X 3/8	4.0
SF	SFX1-3/4	3/8 x 3/16	3/8 X 3/8	4.0
SF	SFX1-13/16	1/2 x 1/4	1/2 X 1/2	3.9
SF	SFX1-7/8	1/2 x 1/4	1/2 X 1/2	3.8
SF	SFX1-15/16	1/2 x 1/4	1/2 X 1/2	3.7
SF	SFX2	1/2 x 1/4	1/2 X 1/2	3.6
SF	SFX2-1/16	1/2 x 1/4	1/2 X 1/2	3.4
SF	SFX2-1/8	1/2 x 1/4	1/2 X 1/2	3.4
SF	SFX2-3/16	1/2 x 1/4	1/2 X 1/2	3.3
SF	SFX2-1/4	1/2 x 1/4	1/2 X 1/2	3.2
SF	SFX2-1/4KW5/8	5/8 x 5/16	5/8 X 5/8	4.0
SF	SFX2-5/16	5/8 x 3/16**	5/8 X 1/2	3.3
SF	SFX2-3/8	5/8 x 3/16**	5/8 X 1/2	3.1
SF	SFX2-7/16	5/8 x 3/16**	5/8 X 1/2	3.0
SF	SFX2-1/2	5/8 x 3/16**	5/8 X 1/2	2.9
SF	SFX2-9/16	5/8 x 1/16**	5/8 X 3/8	2.7
SF	SFX2-5/8	5/8 x 1/16**	5/8 X 3/8	2.6
SF	SFX2-11/16	5/8 x 1/16**	5/8 X 3/8	2.5
SF	SFX2-3/4	5/8 x 1/16**	5/8 X 3/8	2.3
SF	SFX2-13/16	3/4 x 1/16**	3/4 x 7/16	2.2

* Bushings with 1/2" wide keyway will be shipped unless the 5/8" wide keyway is specified when ordering.
° All 1/2" bore sizes are stocked without a keyseat. A standard keyseat 1/8" X 1/16" is available upon request.
** Shallow keyseat Baldor supplies the key Keys not supplied for standard keyseat dimension.

QD BUSHINGS STANDARD STOCK BORES (INCHES)

	Bushing #	Keyseat	Key	Wt
SF	SFX2-7/8	3/4 x 1/16**	3/4 x 7/16	2.1
SF	SFX2-15/16	3/4 x 1/32**	3/4 x 13/32	2.0
E	EX7/8	3/16 X 3/32	3/16 X 3/16	10.5
E	EX15/16	1/4 x 1/8	1/4 X 1/4	10.6
E	EX1	1/4 x 1/8	1/4 X 1/4	10.4
E	EX1-1/16	1/4 x 1/8	1/4 X 1/4	10.4
E	EX1-1/8	1/4 x 1/8	1/4 X 1/4	10.4
E	EX1-3/16	1/4 x 1/8	1/4 X 1/4	10.3
E	EX1-1/4	1/4 x 1/8	1/4 X 1/4	10.3
E	EX1-5/16	5/16 x 5/32	5/16 X5/16	10.3
E	EX1-3/8	5/16 x 5/32	5/16 X5/16	10.1
E	EX1-7/16	3/8 x 3/16	3/8 X 3/8	10.0
E	EX1-1/2	3/8 x 3/16	3/8 X 3/8	10.1
E	EX1-9/16	3/8 x 3/16	3/8 X 3/8	9.8
E	EX1-5/8	3/8 x 3/16	3/8 X 3/8	9.6
E	EX1-11/16	3/8 x 3/16	3/8 X 3/8	9.7
E	EX1-3/4	3/8 x 3/16	3/8 X 3/8	9.5
E	EX1-13/16	1/2 x 1/4	1/2 X 1/2	9.3
E	EX1-7/8	1/2 x 1/4	1/2 X 1/2	9.1
E	EX1-15/16	1/2 x 1/4	1/2 X 1/2	9.1
E	EX2	1/2 x 1/4	1/2 X 1/2	8.9
E	EX2-1/16	1/2 x 1/4	1/2 X 1/2	8.7
E	EX2-1/8	1/2 x 1/4	1/2 X 1/2	8.6
E	EX2-3/16	1/2 x 1/4	1/2 X 1/2	8.5
E	EX2-1/4	1/2 x 1/4	1/2 X 1/2	8.3
E	EX2-1/4KW5/8	5/8 x 5/16	5/8 X 5/8	7.6
E	EX2-5/16	5/8 x 5/16	5/8 X 5/8	8.2
E	EX2-3/8	5/8 x 5/16	5/8 X 5/8	8.0
E	EX2-7/16	5/8 x 5/16	5/8 X 5/8	7.9
E	EX2-1/2	5/8 x 5/16	5/8 X 5/8	7.9
E	EX2-9/16	5/8 x 5/16	5/8 X 5/8	7.5
E	EX2-5/8	5/8 x 5/16	5/8 X 5/8	7.6
E	EX2-11/16	5/8 x 5/16	5/8 X 5/8	7.4
E	EX2-3/4	5/8 x 5/16	5/8 X 5/8	7.1
E	EX2-13/16	3/4 x 3/8	3/4 x 3/4	6.8
E	EX2-7/8	3/4 x 3/8	3/4 x 3/4	6.6
E	EX2-15/16	3/4 x1/8**	3/4 x 1/2	6.8
E	EX3	3/4 x1/8**	3/4 x 1/2	6.8
E	EX3-1/16	3/4 x1/8**	3/4 x 1/2	6.5
E	EX3-1/8	3/4 x1/8**	3/4 x 1/2	6.2
E	EX3-3/16	3/4 x1/8**	3/4 x 1/2	6.0
E	EX3-1/4	3/4 x1/8**	3/4 x 1/2	5.8
E	EX3-5/16	7/8 x 1/16**	7/8 X 1/2	5.7
E	EX3-3/8	7/8 x 1/16**	7/8 X 1/2	5.5
E	EX3-7/16	7/8 x 1/16**	7/8 X 1/2	5.5
E	EX3-1/2	7/8 x 1/16**	7/8 X 1/2	5.0
F	FX1	1/4 x 1/8	1/4 X 1/4	18.0
F	FX1-1/16	1/4 x 1/8	1/4 X 1/4	17.9
F	FX1-1/8	1/4 x 1/8	1/4 X 1/4	17.9
F	FX1-3/16	1/4 x 1/8	1/4 X 1/4	17.6
F	FX1-1/4	1/4 x 1/8	1/4 X 1/4	17.5
F	FX1-5/16	5/16 x 5/32	5/16 X5/16	17.4
F	FX1-3/8	5/16 x 5/32	5/16 X5/16	17.3
F	FX1-7/16	3/8 x 3/16	3/8 X 3/8	17.2
F	FX1-1/2	3/8 x 3/16	3/8 X 3/8	17.0
F	FX1-9/16	3/8 x 3/16	3/8 X 3/8	16.9
F	FX1-5/8	3/8 x 3/16	3/8 X 3/8	16.8
F	FX1-11/16	3/8 x 3/16	3/8 X 3/8	16.7
F	FX1-3/4	3/8 x 3/16	3/8 X 3/8	16.5
F	FX1-13/16	1/2 x 1/4	1/2 X 1/2	16.3
F	FX1-7/8	1/2 x 1/4	1/2 X 1/2	16.1
F	FX1-15/16	1/2 x 1/4	1/2 X 1/2	15.9
F	FX2	1/2 x 1/4	1/2 X 1/2	15.7
F	FX2-1/16	1/2 x 1/4	1/2 X 1/2	15.5
F	FX2-1/8	1/2 x 1/4	1/2 X 1/2	15.3

	Bushing #	Keyseat	Key	Wt
F	FX2-3/16	1/2 x 1/4	1/2 X 1/2	15.1
F	FX2-1/4	1/2 x 1/4	1/2 X 1/2	15.0
F	FX2-1/4KW5/8	5/8 x 5/16	5/8 X 5/8	15.0
F	FX2-5/16	5/8 x 5/16	5/8 X 5/8	14.7
F	FX2-3/8	5/8 x 5/16	5/8 X 5/8	14.5
F	FX2-7/16	5/8 x 5/16	5/8 X 5/8	14.3
F	FX2-1/2	5/8 x 5/16	5/8 X 5/8	14.0
F	FX2-9/16	5/8 x 5/16	5/8 X 5/8	13.8
F	FX2-5/8	5/8 x 5/16	5/8 X 5/8	13.5
F	FX2-11/16	5/8 x 5/16	5/8 X 5/8	13.3
F	FX2-3/4	5/8 x 5/16	5/8 X 5/8	13.1
F	FX2-13/16	3/4 x 3/8	3/4 x 3/4	12.8
F	FX2-7/8	3/4 x 3/8	3/4 x 3/4	11.7
F	FX2-15/16	3/4 x 3/8	3/4 x 3/4	12.2
F	FX3	3/4 x 3/8	3/4 x 3/4	11.2
F	FX3-1/16	3/4 x 3/8	3/4 x 3/4	11.7
F	FX3-1/8	3/4 x 3/8	3/4 x 3/4	11.4
F	FX3-3/16	3/4 x 3/8	3/4 x 3/4	11.1
F	FX3-1/4	3/4 x 3/8	3/4 x 3/4	10.8
F	FX3-5/16	7/8 x 3/16**	7/8 X 5/8	11.0
F	FX3-3/8	7/8 x 3/16**	7/8 X 5/8	10.7
F	FX3-7/16	7/8 x 3/16**	7/8 X 5/8	10.4
F	FX3-1/2	7/8 x 3/16**	7/8 X 5/8	10.1
F	FX3-9/16	7/8 x 3/16**	7/8 X 5/8	9.8
F	FX3-5/8	7/8 x 3/16**	7/8 X 5/8	9.4
F	FX3-11/16	7/8 x 3/16**	7/8 X 5/8	9.1
F	FX3-3/4	7/8 x 3/16**	7/8 X 5/8	8.8
F	FX3-13/16	1 x 1/8**	1 X 5/8	8.5
F	FX3-7/8	1 x 1/8**	1 X 5/8	8.2
F	FX3-15/16	1 x 1/8**	1 X 5/8	7.8
F	FX4	No K.S	---	7.0
J	JX1-7/16	3/8 x 3/16	3/8 X 3/8	27.7
J	JX1-1/2	3/8 x 3/16	3/8 X 3/8	27.6
J	JX1-9/16	3/8 x 3/16	3/8 X 3/8	27.4
J	JX1-5/8	3/8 x 3/16	3/8 X 3/8	27.3
J	JX1-11/16	3/8 x 3/16	3/8 X 3/8	27.1
J	JX1-3/4	3/8 x 3/16	3/8 X 3/8	26.9
J	JX1-13/16	1/2 x 1/4	1/2 X 1/2	26.7
J	JX1-7/8	1/2 x 1/4	1/2 X 1/2	26.4
J	JX1-15/16	1/2 x 1/4	1/2 X 1/2	26.2
J	JX2	1/2 x 1/4	1/2 X 1/2	26.0
J	JX2-1/16	1/2 x 1/4	1/2 X 1/2	25.6
J	JX2-1/8	1/2 x 1/4	1/2 X 1/2	25.5
J	JX2-3/16	1/2 x 1/4	1/2 X 1/2	25.2
J	JX2-1/4	1/2 x 1/4	1/2 X 1/2	25.1
J	JX2-5/16	5/8 x 5/16	5/8 X 5/8	24.4
J	JX2-3/8	5/8 x 5/16	5/8 X 5/8	24.5
J	JX2-7/16	5/8 x 5/16	5/8 X 5/8	24.3
J	JX2-1/2	5/8 x 5/16	5/8 X 5/8	23.9
J	JX2-9/16	5/8 x 5/16	5/8 X 5/8	23.5
J	JX2-5/8	5/8 x 5/16	5/8 X 5/8	23.4
J	JX2-11/16	5/8 x 5/16	5/8 X 5/8	23.0
J	JX2-3/4	5/8 x 5/16	5/8 X 5/8	22.7
J	JX2-13/16	3/4 x 3/8	3/4 x 3/4	22.2
J	JX2-7/8	3/4 x 3/8	3/4 x 3/4	21.9
J	JX2-15/16	3/4 x 3/8	3/4 x 3/4	21.7
J	JX3	3/4 x 3/8	3/4 x 3/4	21.3
J	JX3-1/16	3/4 x 3/8	3/4 x 3/4	20.9
J	JX3-1/8	3/4 x 3/8	3/4 x 3/4	20.6
J	JX3-3/16	3/4 x 3/8	3/4 x 3/4	20.3
J	JX3-1/4	3/4 x 3/8	3/4 x 3/4	19.8
J	JX3-5/16	7/8 x 7/16	7/8 X 7/8	19.5
J	JX3-3/8	7/8 x 7/16	7/8 X 7/8	19.0
J	JX3-7/16	7/8 x 7/16	7/8 X 7/8	18.6
J	JX3-1/2	7/8 x 7/16	7/8 X 7/8	18.3

	Bushing #	Keyseat	Key	Wt
J	JX3-9/16	7/8 x 7/16	7/8 X 7/8	16.8
J	JX3-5/8	7/8 x 7/16	7/8 X 7/8	17.4
J	JX3-11/16	7/8 x 7/16	7/8 X 7/8	17.1
J	JX3-3/4	7/8 x 7/16	7/8 X 7/8	16.6
J	JX3-13/16	1 x 1/2	1 X 1	17.1
J	JX3-7/8	1 x 3/8**	1 X 7/8	16.6
J	JX3-15/16	1 x 3/8**	1 X 7/8	16.1
J	JX4	1 x 1/8**	1 X 5/8	15.6
J	JX4-1/16	1 x 1/8**	1 X 5/8	15.2
J	JX4-1/8	1 x 1/8**	1 X 5/8	14.7
J	JX4-3/16	1 x 1/8**	1 X 5/8	14.3
J	JX4-1/4	1 x 1/8**	1 X 5/8	13.8
J	JX4-5/16	1 x 1/8**	1 X 5/8	13.3
J	JX4-3/8	1 x 1/8**	1 X 5/8	12.9
J	JX4-7/16	1 x 1/8**	1 X 5/8	11.5
J	JX4-1/2	1 x 1/8**	1 X 5/8	11.8
M	MX2	1/2 x 1/4	1/2 X 1/2	59.2
M	MX2-1/8	1/2 x 1/4	1/2 X 1/2	58.5
M	MX2-3/16	1/2 x 1/4	1/2 X 1/2	58.1
M	MX2-1/4	1/2 x 1/4	1/2 X 1/2	57.7
M	MX2-3/8	5/8 x 5/16	5/8 X 5/8	56.9
M	MX2-7/16	5/8 x 5/16	5/8 X 5/8	56.5
M	MX2-1/2	5/8 x 5/16	5/8 X 5/8	56.1
M	MX2-9/16	5/8 x 5/16	5/8 X 5/8	55.7
M	MX2-5/8	5/8 x 5/16	5/8 X 5/8	55.2
M	MX2-11/16	5/8 x 5/16	5/8 X 5/8	54.7
M	MX2-3/4	5/8 x 5/16	5/8 X 5/8	54.3
M	MX2-13/16	3/4 x 3/8	3/4 x 3/4	53.8
M	MX2-7/8	3/4 x 3/8	3/4 x 3/4	53.3
M	MX2-15/16	3/4 x 3/8	3/4 x 3/4	52.8
M	MX3	3/4 x 3/8	3/4 x 3/4	52.3
M	MX3-1/8	3/4 x 3/8	3/4 x 3/4	51.2
M	MX3-3/16	3/4 x 3/8	3/4 x 3/4	50.7
M	MX3-1/4	3/4 x 3/8	3/4 x 3/4	50.1
M	MX3-5/16	7/8 x 7/16	7/8 X 7/8	49.6
M	MX3-3/8	7/8 x 7/16	7/8 X 7/8	49.0
M	MX3-7/16	7/8 x 7/16	7/8 X 7/8	48.4
M	MX3-1/2	7/8 x 7/16	7/8 X 7/8	47.8
M	MX3-5/8	7/8 x 7/16	7/8 X 7/8	49.2
M	MX3-11/16	7/8 x 7/16	7/8 X 7/8	48.5
M	MX3-3/4	7/8 x 7/16	7/8 X 7/8	48.3
M	MX3-13/16	1 x 1/2	1 X 1	47.2
M	MX3-7/8	1 x 1/2	1 X 1	46.4
M	MX3-15/16	1 x 1/2	1 X 1	45.9
M	MX4	1 x 1/2	1 X 1	45.4
M	MX4-1/8	1 x 1/2	1 X 1	43.9
M	MX4-3/16	1 x 1/2	1 X 1	43.1
M	MX4-1/4	1 x 1/2	1 X 1	42.2
M	MX4-5/16	1 x 1/2	1 X 1	42.1
M	MX4-3/8	1 x 1/2	1 X 1	40.9
M	MX4-7/16	1 x 1/2	1 X 1	39.9
M	MX4-1/2	1 x 1/2	1 X 1	39.5
M	MX4-9/16	1-1/4 x 5/8	1-1/4 X 1-1/4	38.2
M	MX4-5/8	1-1/4 x 5/8	1-1/4 X 1-1/4	37.7
M	MX4-11/16	1-1/4 x 5/8	1-1/4 X 1-1/4	37.3
M	MX4-3/4	1-1/4 x 5/8	1-1/4 X 1-1/4	35.0
M	MX4-13/16	1-1/4 x 5/8	1-1/4 X 1-1/4	34.0
M	MX4-7/8	1-1/4 x 1/4**	1-1/4 X 7/8	34.1
M	MX4-15/16	1-1/4 x 1/4**	1-1/4 X 7/8	42.3
M	MX5	1-1/4 x 1/4**	1-1/4 X 7/8	32.6
M	MX5-1/8	1-1/4 x 1/4**	1-1/4 X 7/8	30.9
M	MX5-3/16	1-1/4 x 1/4**	1-1/4 X 7/8	30.1
M	MX5-1/4	1-1/4 x 1/4**	1-1/4 X 7/8	29.1
M	MX5-5/16	1-1/4 x 1/4**	1-1/4 X 7/8	29.0
M	MX5-3/8	1-1/4 x 1/4**	1-1/4 X 7/8	27.3

* Bushings with 1/2" wide keyway will be shipped unless the 5/8" wide keyway is specified when ordering. ** Shallow keyseat Baldor supplies the key
° All 1/2" bore sizes are stocked without a keyseat. A standard keyseat 1/8" X 1/16" is available upon request. Keys not supplied for standard keyseat dimension.

BALDOR
A MEMBER OF THE ABB GROUP

QD BUSHINGS STANDARD STOCK BORES (INCHES)

	Bushing #	Keyseat	Key	Wt
M	MX5-7/16	1-1/4 x 1/4**	1-1/4 X 7/8	26.5
M	MX5-1/2	1-1/4 x 1/4**	1-1/4 X 7/8	25.9
N	NX2-15/16	3/4 x 3/8	3/4 x 3/4	77.2
N	NX3	3/4 x 3/8	3/4 x 3/4	76.6
N	NX3-1/4	3/4 x 3/8	3/4 x 3/4	74.0
N	NX3-5/16	7/8 x 7/16	7/8 X 7/8	73.3
N	NX3-3/8	7/8 x 7/16	7/8 X 7/8	72.6
N	NX3-7/16	7/8 x 7/16	7/8 X 7/8	71.9
N	NX3-1/2	7/8 x 7/16	7/8 X 7/8	71.2
N	NX3-5/8	7/8 x 7/16	7/8 X 7/8	74.6
N	NX3-11/16	7/8 x 7/16	7/8 X 7/8	69.0
N	NX3-3/4	7/8 x 7/16	7/8 X 7/8	68.2
N	NX3-7/8	1 x 1/2	1 X 1	66.6
N	NX3-15/16	1 x 1/2	1 X 1	65.8
N	NX4	1 x 1/2	1 X 1	65.0
N	NX4-3/16	1 x 1/2	1 X 1	62.4
N	NX4-1/8	1 x 1/2	1 X 1	63.3
N	NX4-1/4	1 x 1/2	1 X 1	61.6
N	NX4-5/16	1 x 1/2	1 X 1	66.5
N	NX4-3/8	1 x 1/2	1 X 1	59.8
N	NX4-7/16	1 x 1/2	1 X 1	58.9
N	NX4-1/2	1 x 1/2	1 X 1	57.9
N	NX4-9/16	1-1/4 x 5/8	1-1/4 X 1-1/4	62.5
N	NX4-5/8	1-1/4 x 5/9	1-1/4 X 1-1/4	56.0
N	NX4-11/16	1-1/4 x 5/10	1-1/4 X 1-1/4	55.1
N	NX4-3/4	1-1/4 x 5/11	1-1/4 X 1-1/4	54.1
N	NX4-7/8	1-1/4 x 5/12	1-1/4 X 1-1/4	52.1
N	NX4-15/16	1-1/4 x 5/13	1-1/4 X 1-1/4	51.1
N	NX5	1-1/4 x 5/14	1-1/4 X 1-1/4	50.1
N	NX5-1/8	1-1/4 x 1/4** §	1-1/4 X 7/8	48.0
N	NX5-3/16	1-1/4 x 1/4** §	1-1/4 X 7/8	46.9
N	NX5-1/4	1-1/4 x 1/4** §	1-1/4 X 7/8	49.9
N	NX5-5/16	1-1/4 x 1/4** §	1-1/4 X 7/8	48.8
N	NX5-3/8	1-1/4 x 1/4** §	1-1/4 X 7/8	47.8
N	NX5-7/16	1-1/4 x 1/4** §	1-1/4 X 7/8	46.8
N	NX5-1/2	1-1/4 x 1/4** §	1-1/4 X 7/8	45.4
N	NX5-11/16	1-1/2 x 1/4** §	1-1/2 X 1	48.0
N	NX5-3/4	1-1/2 x 1/4** §	1-1/2 X 1	43.6
N	NX5-7/8	1-1/2 x 1/4** §	1-1/2 X 1	38.5
N	NX5-15/16	1-1/2 x 1/8** §	1-1/2 X 7/8	39.3
N	NX6	1-1/2 x 1/8** §	1-1/2 X 7/8	39.0
P	PX2-15/16	3/4 x 3/8	3/4 x 3/4	130.3
P	PX3-3/16	3/4 x 3/8	3/4 x3/4	127.4
P	PX3-1/4	3/4 x 3/8	3/4 x3/4	129.9
P	PX3-3/8	7/8 x 7/16	7/8 X 7/8	125.1
P	PX3-7/16	7/8 x 7/16	7/8 X 7/8	124.2
P	PX3-1/2	7/8 x 7/16	7/8 X 7/8	123.4
P	PX3-5/8	7/8 x 7/16	7/8 X 7/8	121.7
P	PX3-3/4	7/8 x 7/16	7/8 X 7/8	119.9
P	PX3-7/8	1 x 1/2	1 X 1	118.1
P	PX3-15/16	1 x 1/2	1 X 1	117.2
P	PX4	1 x 1/2	1 X 1	116.2
P	PX4-3/16	1 x 1/2	1 X 1	113.5
P	PX4-1/4	1 x 1/2	1 X 1	112.3
P	PX4-3/8	1 x 1/2	1 X 1	110.2
P	PX4-7/16	1 x 1/2	1 X 1	109.2
P	PX4-1/2	1 x 1/2	1 X 1	108.1
P	PX4-5/8	1-1/4 x 5/8	1-1/4 X 1-1/4	105.9
P	PX4-11/16	1-1/4 x 5/8	1-1/4 X 1-1/4	104.8
P	PX4-3/4	1-1/4 x 5/8	1-1/4 X 1-1/4	103.7
P	PX4-7/8	1-1/4 x 5/8	1-1/4 X 1-1/4	101.4
P	PX4-15/16	1-1/4 x 5/8	1-1/4 X 1-1/4	110.0

	Bushing #	Keyseat	Key	Wt
P	PX5	1-1/4 x 5/8	1-1/4 X 1-1/4	106.5
P	PX5-1/8	1-1/4 x 5/8	1-1/4 X 1-1/4	96.6
P	PX5-1/4	1-1/4 x 5/8	1-1/4 X 1-1/4	94.1
P	PX5-5/16	1-1/4 x 5/8	1-1/4 X 1-1/4	97.5
P	PX5-3/8	1-1/4 x 5/8	1-1/4 X 1-1/4	91.6
P	PX5-7/16	1-1/4 x 5/8	1-1/4 X 1-1/4	90.3
P	PX5-1/2	1-1/4 x 5/8	1-1/4 X 1-1/4	88.9
P	PX5-3/4	1-1/2 x 1/4** §	1-1/2 X 1	95.0
P	PX5-7/8	1-1/2 x 1/4** §	1-1/2 X 1	80.8
P	PX5-15/16	1-1/2 x 1/4** §	1-1/2 X 1	91.0
P	PX6	1-1/2 x 1/4** §	1-1/2 X 1	77.9
P	PX6-1/16	1-1/2 x 1/4** §	1-1/2 X 1	76.5
P	PX6-1/4	1-1/2 x 1/4** §	1-1/2 X 1	72.1
P	PX6-7/16	1-1/2 x 1/4** §	1-1/2 X 1	79.0
P	PX6-1/2	1-1/2 x 1/4** §	1-1/2 X 1	66.0
P	PX6-3/4	1-3/4 x 1/8** §	1-3/4 X 1	73.0
P	PX6-7/8	1-3/4 x 1/8** §	1-3/4 X 1	58.0
P	PX6-15/16	1-3/4 x 1/8** §	1-3/4 X 1	54.7
P	PX7	1-3/4 x 1/8** §	1-3/4 X 1	53.1
W	WX4-7/16	1 x 1/2	1 x 1	239.8
W	WX4-1/4	1 X 1/2	1 x 1	248.3
W	WX4-11/16	1-1/4 x 5/8	1-1/4 X 1-1/4	239.3
W	WX4-5/8	1-1/4 x 5/8	1-1/4 X 1-1/4	275.0
W	WX4-3/4	1-1/4 x 5/8	1-1/4 X 1-1/4	233.2
W	WX4-15/16	1-1/4 x 5/8	1-1/4 X 1-1/4	275.0
W	WX5	1-1/4 x 5/8	1-1/4 X 1-1/4	265.0
W	WX5-1/4	1-1/4 x 5/8	1-1/4 X 1-1/4	244.0
W	WX5-7/16	1-1/4 x 5/8	1-1/4 X 1-1/4	255.0
W	WX5-1/2	1-1/4 x 5/8	1-1/4 X 1-1/4	223.0
W	WX5-11/16	1-1/4 x 5/8	1-1/4 X 1-1/4	255.0
W	WX5-3/4	1-1/2 x 3/4	1-1/2 X 1-1/2	230.0
W	WX7-7/8	1-1/2 x 3/4	2 X 1	200.0
W	WX5-15/16	1-1/2 x 3/4	1-1/2 X 1-1/2	203.7
W	WX6	1-1/2 x 3/4	1-1/2 X 1-1/2	237.0
W	WX6-1/4	1-1/2 x 3/4	1-1/2 X 1-1/2	194.9
W	WX6-7/16	1-1/2 x 3/4	1-1/2 X 1-1/2	189.3
W	WX6-1/2	1-1/2 x 3/4	1-1/2 X 1-1/2	187.4
W	WX6-3/4	1-3/4 x 3/4	1-3/4 X 1-1/2	179.8
W	WX6-7/8	1-3/4 x 3/4	1-3/4 X 1-1/2	198.0
W	WX6-15/16	1-3/4 x 3/4	1-3/4 X 1-1/2	185.0
W	WX7	1-3/4 x 3/4	1-3/4 X 1-1/2	171.8
W	WX7-1/8	1-3/4 x 3/4	1-3/4 X 1-1/2	170.0
W	WX7-1/4	1-3/4 x 3/4	1-3/4 X 1-1/2	175.0
W	WX7-3/8	1-3/4 x 3/4	1-3/4 X 1-1/2	161.7
W	WX7-7/16	1-3/4 x 3/4	1-3/4 X 1-1/2	160.0
W	WX7-1/2	1-3/4 x 3/4	1-3/4 X 1-1/2	154.9
W	WX7-3/4	2 x 1/4**	2 X 1	163.0
W	WX8	2 x 1/4** §	2 X 1	172.0
W	WX8-1/4	2 x 1/4** §	2 X 1	153.0
W	WX8-1/2	2 x 1/4** §	2 X 1	133.0
W	WX8-1/2KW2X3/8	2 x 3/8** §	2 X 1-1/8	133.0

	Bushing #	Keyseat	Key	Wt
S	SX5-1/2	1-1/4 x 5/8	1-1/4 X 1-1/4	485.0
S	SX5-3/4	1-1/2 x 3/4	1-1/2 X 1-1/2	476.6
S	SX5-7/8	1-1/2 x 3/4	1-1/2 X 1-1/2	472.1
S	SX5-15/16	1-1/2 x 3/4	1-1/2 X 1-1/2	470.2
S	SX6	1-1/2 x 3/4	1-1/2 X 1-1/2	447.0
S	SX6-1/4	1-1/2 x 3/4	1-1/2 X 1-1/2	458.6
S	SX6-7/16	1-1/2 x 3/4	1-1/2 X 1-1/2	451.6
S	SX6-1/2	1-1/2 x 3/4	1-1/2 X 1-1/2	449.3
S	SX6-3/4	1-3/4 x 3/4	1-3/4 X 1-1/2	440.6
S	SX6-15/16	1-3/4 x 3/4	1-3/4 X 1-1/2	430.8
S	SX7	1-3/4 x 3/4	1-3/4 X 1-1/2	425.5
S	SX7-1/4	1-3/4 x 3/4	1-3/4 X 1-1/2	394.0
S	SX7-1/2	1-3/4 x 3/4	1-3/4 X 1-1/2	404.8
S	SX7-3/4	2 x 3/4	2 X 1-1/2	392.1
S	SX7-7/8	2 x 3/4	2 X 1-1/2	386.6
S	SX8	2 x 3/4	2 X 1-1/2	378.5
S	SX8-1/4	2 x 3/4	2 X 1-1/2	367.3
S	SX8-1/2	2 x 3/4	2 X 1-1/2	353.8
S	SX8-1/2KW2X1	2 x 1	2 X 1-3/4	346.0
S	SX8-1/2KW2X3/4	2 x 3/4	2 X 1-1/2	346.0
S	SX8-3/4	2 x 3/4	2 X 1-1/2	340.1
S	SX8-7/8	2 x 3/4	2 X 1-1/2	333.4
S	SX9	2 x 3/4	2 X 1-1/2	326.1
S	SX9-1/4	2-1/2 x 1/2** §	2-1/2 X 1-3/8	288.0
S	SX9-3/8	2-1/2 x 1/2** §	2-1/2 X 1-3/8	303.3
S	SX9-1/2	2-1/2 x 1/2** §	2-1/2 X 1-3/8	296.4
S	SX9-3/4	2-1/2 x 3/8** §	2-1/2 X 1-1/4	281.1
S	SX9-3/4KW2X1/4	2 x 1/4	---	256.0
S	SX9-7/8	2-1/2 x 3/8** §	2-1/2 X 1-1/8	271.4
S	SX10	2-1/2 x 1/4** §	2-1/2 X 1-1/8	241.0

* Bushings with 1/2" wide keyway will be shipped unless the 5/8" wide keyway is specified when ordering. ** Shallow keyseat Baldor supplies the key
° All 1/2" bore sizes are stocked without a keyseat. A standard keyseat 1/8" X 1/16" is available upon request. Keys not supplied for standard keyseat dimension.
§ Others sizes manufactured in ductile iron.

QD BUSHINGS STANDARD STOCK BORES (MILLIMETERS)

Note: In metric bores, a key is not supplied for shallow keyway. The metric system does not refer to keyseat or keyway dimensions as does the English system; instead, dimensions are given for the key itself. For nominal diameter up to 22 mm, the key is square in shape. For nominal diameter over 22 mm, the key is rectangular in shape. This meets ISO standards.

	Bushing #	Keyseat	Key	Weight
L	LX14MM	5 x 2.3	5 x 5	0.9
L	LX15MM	5 x 2.3	5 x 5	0.9
L	LX16MM	5 x 2.3	5 x 5	0.9
L	LX18MM	6 x 2.8	6 x 6	0.9
L	LX19MM	6 x 2.8	6 x 6	0.9
L	LX20MM	6 x 2.8	6 x 6	0.9
L	LX22MM	6 x 2.8	6 x 6	0.8
L	LX24MM	8 x 3.3	8 x 7	0.8
L	LX25MM	8 x 3.3	8 x 7	0.8
L	LX28MM	8 x 3.3	8 x 7	0.7
L	LX30MM	8 x 3.3	8 x 7	0.6
L	LX32MM	10 x 3.3	10 x 8	0.6
L	LX35MM	10 x 1.3**	10 X 6**	0.5
L	LX38MM	10 x 1.3**	10 X 6**	0.3
JA	JAX15MM	5 x 2.3	5 x 5	0.5
JA	JAX16MM	6 x 2.8	6 x 6	0.5
JA	JAX18MM	6 x 2.8	6 x 6	0.5
JA	JAX19MM	6 x 2.8	6 x 6	0.4
JA	JAX20MM	6 x 2.8	6 x 6	0.4
JA	JAX22MM	6 x 2.8	6 x 6	0.4
JA	JAX24MM	8 x 2.3**	8 x 6**	0.4
JA	JAX25MM	8 x 2.3**	8 x 6**	0.4
JA	JAX28MM	8 x 1.3**	8 x 5**	0.4
SH	SHX14MM	5 x 2.3	5 x 5	1.2
SH	SHX15MM	5 x 2.3	5 x 5	1.1
SH	SHX16MM	5 x 2.3	5 x 5	1.1
SH	SHX18MM	6 x 2.8	6 x 6	1.1
SH	SHX19MM	6 x 2.8	6 x 6	1.1
SH	SHX20MM	6 x 2.8	6 x 6	1.1
SH	SHX22MM	6 x 2.8	6 x 6	1.0
SH	SHX24MM	8 x 3.3	8 x 7	1.0
SH	SHX25MM	8 x 3.3	8 x 7	1.0
SH	SHX28MM	8 x 3.3	8 x 7	0.9
SH	SHX30MM	8 x 3.3	8 x 7	0.9
SH	SHX32MM	10 x 3.3	10 x 8	0.8
SH	SHX35MM	10 x 3.3	10 x 8	0.7
SH	SHX38MM	10 x 2.3**	10 x 7**	0.7
SH	SHX40MM	No. k.s.	No K.S.	0.6
SDS	SDSX14MM	5 x 2.3	5 x 5	1.7
SDS	SDSX15MM	5 x 2.3	5 x 5	1.7
SDS	SDSX16MM	5 x 2.3	5 x 5	1.7
SDS	SDSX18MM	6 x 2.8	6 x 6	1.7
SDS	SDSX19MM	6 x 2.8	6 x 6	1.7
SDS	SDSX20MM	6 x 2.8	6 x 6	1.7
SDS	SDSX22MM	6 x 2.8	6 x 6	1.6
SDS	SDSX24MM	8 x 3.3	8 x 7	1.5
SDS	SDSX25MM	8 x 3.3	8 x 7	1.5
SDS	SDSX28MM	8 x 3.3	8 x 7	1.5
SDS	SDSX30MM	8 x 3.3	8 x 7	1.4
SDS	SDSX32MM	10 x 3.3	10 x 8	1.4
SDS	SDSX35MM	10 x 3.3	10 x 8	1.3
SDS	SDSX38MM	10 x 3.3	10 x 8	1.2
SDS	SDSX40MM	12 x 3.3	12 x 8	1.1
SDS	SDSX42MM	12 x 3.3	12 x 8	1.1
SD	SDX14MM	5 x 2.3	5 x 5	2.2
SD	SDX15MM	5 x 2.3	5 x 5	2.1
SD	SDX16MM	5 x 2.3	5 x 5	2.1
SD	SDX18MM	6 x 2.8	6 x 6	2.0
SD	SDX19MM	6 x 2.8	6 x 6	2.1
SD	SDX20MM	6 x 2.8	6 x 6	2.1

	Bushing #	Keyseat	Key	Weight
SD	SDX22MM	6 x 2.8	6 x 6	2.0
SD	SDX24MM	8 x 3.3	8 x 7	1.9
SD	SDX25MM	8 x 3.3	8 x 7	1.9
SD	SDX28MM	8 x 3.3	8 x 7	1.8
SD	SDX30MM	8 x 3.3	8 x 7	1.8
SD	SDX32MM	10 x 3.3	11 x 3.3	1.7
SD	SDX35MM	10 x 3.3	11 x 3.3	1.6
SD	SDX38MM	10 x 3.3	11 x 3.3	1.5
SD	SDX40MM	12 x 3.3	12 x 8	1.4
SD	SDX42MM	12 x 3.3	12 x 8	1.3
SD	SDX48MM	14 X 3.8	14 X 9	1.2
SK	SKX14MM	5 x 2.3	5 x 5	3.6
SK	SKX15MM	5 x 2.3	5 x 5	3.7
SK	SKX16MM	5 x 2.3	5 x 5	3.6
SK	SKX18MM	6 x 2.8	6 x 6	3.6
SK	SKX19MM	6 x 2.8	6 x 6	3.5
SK	SKX20MM	6 x 2.8	6 x 6	3.5
SK	SKX22MM	6 x 2.8	6 x 6	3.4
SK	SKX24MM	8 x 3.3	8 x 7	3.4
SK	SKX25MM	8 x 3.3	8 x 7	3.4
SK	SKX28MM	8 x 3.3	8 x 7	3.3
SK	SKX30MM	8 x 3.3	8 x 7	3.2
SK	SKX32MM	10 x 3.3	10 x 8	3.1
SK	SKX35MM	10 x 3.3	10 x 8	3.0
SK	SKX38MM	10 x 3.3	10 x 8	2.9
SK	SKX40MM	12 x 3.3	12 x 8	2.8
SK	SKX42MM	12 x 3.3	12 x 8	2.7
SK	SKX45MM	14 x 3.8	14 x 9	2.6
SK	SKX48MM	14 x 3.8	14 x 9	2.4
SK	SKX50MM	14 x 3.8	14 x 9	2.3
SK	SKX55MM	16 x 4.3	16 x 10	2.0
SK	SKX60MM	18 x 3.4**	18 x 10**	1.6
SF	SFX20MM	6 X 2.8	6 X 6	4.6
SF	SFX24MM	8 X 3.3	8 X 7	4.8
SF	SFX25MM	8 x 3.3	8 x 7	4.8
SF	SFX28MM	8 x 3.3	8 x 7	4.7
SF	SFX30MM	8 x 3.3	8 x 7	4.6
SF	SFX32MM	10 x 3.3	10 x 8	4.5
SF	SFX35MM	10 x 3.3	10 x 8	4.4
SF	SFX38MM	10 x 3.3	10 x 8	4.3
SF	SFX40MM	12 x 3.3	12 x 8	4.2
SF	SFX42MM	12 x 3.3	12 x 8	4.1
SF	SFX45MM	14 x 3.8	14 x 9	3.9
SF	SFX48MM	14 x 3.8	14 x 9	3.7
SF	SFX50MM	14 x 3.8	14 x 9	3.6
SF	SFX55MM	16 x 4.3	16 x 10	3.3
SF	SFX60MM	18 x 4.4	18 x 11	2.9
SF	SFX65MM	18 x 4.4	18 x 11	2.5
E	EX35MM	10 x 3.3	10 x 8	10.0
E	EX38MM	10 x 3.3	10 x 8	9.9
E	EX40MM	12 x 3.3	12 x 8	9.9
E	EX42MM	12 x 3.3	12 x 8	9.7
E	EX45MM	14 x 3.8	14 x 9	9.4
E	EX48MM	14 x 3.8	14 x 9	9.2
E	EX50MM	14 x 3.8	14 x 9	9.0
E	EX55MM	16 x 4.3	16 x 10	8.6
E	EX60MM	18 x 4.4	18 x 11	8.1
E	EX65MM	19 x 4.4	19 x 11	7.6
E	EX70MM	20 x 4.9	20 x 12	7.1
E	EX75MM	20 x 4.9	20 x 12	6.5

	Bushing #	Keyseat	Key	Weight
E	EX80MM	22 x 5.4	22 x 14	5.8
E	EX85MM	22 X 5.4	22 X 14	5.6
F	FX45MM	14 x 3.8	14 x 9	16.4
F	FX48MM	14 x 3.8	14 x 9	16.1
F	FX50MM	14 x 3.8	14 x 9	15.8
F	FX55MM	16 x 4.3	16 x 10	15.2
F	FX60MM	18 x 4.4	18 x 11	14.5
F	FX65MM	18 x 4.4	18 x 11	13.8
F	FX70MM	20 x 4.9	20 x 12	13.1
F	FX75MM	20 x 4.9	20 x 12	12.2
F	FX80MM	22 x 5.4	22 x 14	11.3
F	FX85MM	22 x 5.4	22 x 14	10.2
F	FX90MM	25 x 5.4	25 x 14	9.2
F	FX95MM	25 x 5.4	25 x 14	8.2
F	FX100MM	No. k.s.	No K.S.	7.3
J	JX50MM	14 x 3.8	14 x 9	26.1
J	JX55MM	16 x 4.3	16 x 10	25.3
J	JX60MM	18 x 4.4	18 x 11	24.5
J	JX65MM	18 x 4.4	18 x 11	23.7
J	JX70MM	20 x 4.9	20 x 12	22.5
J	JX75MM	20 x 4.9	20 x 12	21.7
J	JX80MM	22 x 5.4	22 x 14	20.4
J	JX85MM	22 x 5.4	22 x 14	19.4
J	JX90MM	25 x 5.4	25 x 14	18.2
J	JX95MM	25 x 5.4	25 x 14	16.8
J	JX100MM	28 x 6.4	28 x 16	15.0
J	JX110MM	28 x 5.4**	28 x 15**	12.2
J	JX115MM	32 x 1.2**	32 x 11.8 **	10.8
M	MX70MM	20 X 4.9	20 X 12	54.0
M	MX75MM	20 X 4.9	20 X 12	52.3
M	MX80MM	22 X 5.4	22 X 5.4	55.0
M	MX85MM	22 X 5.4	22 X 5.4	55.0
M	MX90MM	25 x 5.4	25 x 14	51.4
M	MX95MM	25 X 5.4	25 X 14	50.0
M	MX100MM	28 x 6.4	28 x 16	46.8
M	MX110MM	28 X 6.4	28 X 16	47.0
M	MX115MM	32 x 7.4	32 x 18	39.9
M	MX120MM	32 x 7.4	32 x 18	36.7
M	MX125MM	32 X 7.4	32 X 18	33.5
M	MX130MM	32 X 7.4	32 X 18	30.9
N	NX80MM	22 X 5.4	22 X 5.4	82.0
N	NX90MM	25 x 5.4	25 x 14	75.0
N	NX95MM	25 X 5.4	25 X 14	75.0
N	NX100MM	28 x 6.4	28 x 16	72.0
N	NX110MM	28 x 6.4	28 x 16	66.5
N	NX120MM	32 x 7.4	32 x 18	60.8
N	NX125MM	32 X 7.4	32 X 18	57.5
N	NX130MM	32 X 7.4	32 X 18	57.5
N	NX150MM	36 X 2.4**	36 X 14**	35.0
P	PX100MM	28 X 6.4	28 X 16	120.0
P	PX110MM	28 X 6.4	28 X 16	119.0
P	PX120MM	32 X 7.4	32 X 18	120.0
P	PX130MM	32 x 7.4	32 x 18	107.0
P	PX140MM	36 X 8.4	36 X 20	101.3
P	PX145MM	36 X 8.4	36 X 20	95.7
P	PX150MM	36 x 8.4	36 x 20	90.0
P	PX160MM	40 X 9.4	40 X 22	90.0
P	PX170MM	40 X 4.4**	40 X 17**	75.0

** Shallow keyseat

Note: All Bushings up to sizes M are manufactured in ductile iron. For all bore sizes key not supplied.

BK2 BUSHING

NEW

DID YOU KNOW THAT...

- Keyed on shaft and hub to reduce shock on the cap screws.
- Mostly used for applications with frequent stop and start or reverse needs.
- The taper on all BK2 Bushings is 3/4” per foot on diameter.
- Type 1 manufactured in cast or ductile iron, type 2 manufactured in ductile iron only.
- 100% interchangeable with licensed manufacturer’s products.
- BK2 Bushing is the most preferred style for fan blades assembly.
- Helps during blind Installation.

Type 1

Type 2

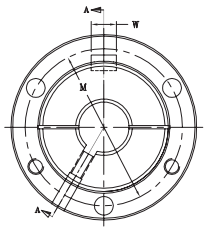

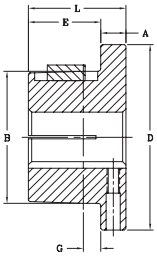

HOW TO ORDER

EXAMPLE: **P1X1-7/16**

P1 | **X1-7/16**

P1: BUSHING SIZE

X1-1/16: BORE SIZE (1-1/16")
Inch bore sizes are designated with the whole inch followed by the fraction. For example, a 1.5" diameter bore would be 1-1/2.

Part #	List Price	Mult. Sym.	Dimensions									Bore range		Cap Screws		Av. Wt. Lbs.	Wrench torque In-Lbs.
			L	A	E	B Larg End	B Small End	D	M	W	G	Type 1	Type 2	No.	Size		
G	10.30	STB29	1	1/4	3/4	1.172	1.133	2	1 9/16	-	3/16	3/8 - 15/16	1	2	1/4-20 UNC X 5/8	.5	95
P1	17.90	STB29	1 15/16	13/32	1 17/32	1.9375	1.8555	3	2 7/16	3/8	7/32	1/2 - 1 7/16	1 1/2 - 1 3/4	3	5/16-18 UNC X 1	1.3	192
P2	19.60	STB29	2 15/16	13/32	2 17/32	1.9375	1.7930	3	2 7/16	3/8	7/32	3/4 - 1 7/16	1 1/2 - 1 3/4	3	5/16-18 UNC X 1	1.5	192
B	17.90	STB29	1 15/16	1/2	1 7/16	2.625	2.5567	3 11/16	3 1/8	1/2	7/32	1/2 - 1 15/16	2 - 2 7/16	3	5/16-18 UNC X 1 1/4	1.8	192
Q1	35.20	STB29	2 1/2	17/32	1 31/32	2.875	2.7657	4 1/8	3 3/8	1/2	7/32	3/4 - 2 1/16	2 1/8 - 2 11/16	3	3/8-16 UNC X 1 1/4	3.5	348
Q2	38.50	STB29	3 1/2	17/32	2 31/32	2.875	2.7032	4 1/8	3 3/8	1/2	7/32	1 - 2 1/16	2 1/8 - 2 5/8	3	3/8-16 UNC X 1 1/4	4.5	348
R1	87.00	STB29	2 7/8	5/8	2 1/4	4.000	3.8750	5 3/8	4 5/8	3/4	1/4	1 1/8 - 2 13/16	2 7/8 - 3 3/4	3	3/8-16 UNC X 1 3/4	7.5	348
R2	98.00	STB29	4 7/8	5/8	4 1/4	4.000	3.7500	5 3/8	4 5/8	3/4	1/4	1 3/8 - 2 13/16	2 7/8 - 3 5/8	3	3/8-16 UNC X 1 3/4	11	348
S1	173.00	STB29	4 3/8	3/4	3 5/8	4.625	4.4180	6 3/8	5 3/8	3/4	5/16	1 11/16 - 3 3/16	3 1/4 - 4 1/4	3	1/2-13 UNC X 2 1/4	13.5	840
S2	217.00	STB29	6 3/4	3/4	6	4.625	4.2696	6 3/8	5 3/8	3/4	5/16	1 7/8 - 3 3/16	3 1/4 - 4 3/16	3	1/2-13 UNC X 2 1/4	19	840
U0*	379.00	STB29	5 1/4	1 1/16	4 3/16	6.000	5.7656	8 3/8	7	1 1/4	7/16	2 3/8 - 3 1/16	-	3	5/8-11 UNC X 2 3/4	30	1680
U0*	379.00	STB29	4 15/16	3/4	4 3/16	6.000	5.7656	8 3/8	7	1 1/4	7/16	3 1/4 - 4 1/4	4 3/8 - 5 1/2	3	5/8-11 UNC X 2 3/4	27	1680
U1*	650.00	STB29	7 1/8	1 1/16	6 1/16	6.000	5.6485	8 3/8	7	1 1/4	7/16	2 3/8 - 4 1/4	4 3/8 - 5 1/2	3	5/8-11 UNC X 2 3/4	40	1680
W1*	1518.00	STB29	8 1/4	1 7/16	6 13/16	8.500	8.1016	12 1/2	10	1 1/4	7/16	3 3/8 - 6 3/16	6 1/4 - 7 7/16	4	3/4-10 UNC X 3	104	3000

BK2 BUSHINGS

Bushing	Standard Bores	Keyseat
G	3/8 - 7/16	none
	1/2 - 9/16	1/8 X 7/16
	5/8 - 11/16 -3/4 -13/16 - 7/8	3/16 X 3/32
	15/16 - 1	1/4 X 1/8
P1	1/2 - 9/16	1/8 X 1/16
	5/8 - 21/32 - 11/16 - 3/4 - 25/32 - 13/16 - 7/8 -	3/16 X 3/32
	15/16 - 31/32 - 1 - 1 1/16 - 1 1/8 - 1 3/16 - 1 1/4	1/4 X 1/8
	1 5/16 - 1 3/8	5/16 X 5/32
	1 3/8 - 1 7/16 - 1 1/2 - 1 9/16 - 1 5/8 - 1 11/16 - 1 3/4	3/8 X 3/16
P2	3/4 - 13/16 - 7/8	3/16 X 3/32
	15/16 - 1 - 1 1/16 - 1 1/8 - 1 3/16 - 1 1/4	1/4 X 1/8
	1 5/16 - 1 3/8	5/16 X 5/32
	1 3/8 - 1 7/16 - 1 1/2 - 1 9/16 - 1 5/8 - 1 11/16 1 3/4	3/8 X 3/16
B	1/2 - 9/16	1/8 X 7/16
	5/8 - 11/16 -3/4 -13/16 - 7/8	3/16 X 3/32
	15/16 - 1 - 1 1/16 - 1 1/8 - 1 3/16 - 1 1/4	1/4 X 1/8
	1 5/16 - 1 3/8	5/16 X 5/32
	1 3/8 - 1 7/16 - 1 1/2 - 1 9/16 - 1 5/8 - 1 11/16 1 3/4	3/8 X 3/16
	1 13/16 - 1 7/8 - 1 15/16 - 2 - 2 1/16 - 2 1/8 - 2 3/16 - 2 1/4	1/2 X 1/4
	2 5/16 - 2 3/8 - 2 7/16	5/8 X 5/16
Q1	3/4 - 13/16 - 7/8	3/16 X 3/32
	15/16 - 1 - 1 1/16 - 1 1/8 - 1 3/16 - 1 1/4	1/4 X 1/8
	1 5/16 - 1 3/8	5/16 X 5/32
	1 3/8 - 1 7/16 - 1 1/2 - 1 9/16 - 1 5/8 - 1 11/16 1 3/4	3/8 X 3/16
	1 13/16 - 1 7/8 - 1 15/16 - 2 - 2 1/16 - 2 1/8 - 2 3/16 - 2 1/4	1/2 X 1/4
	2 5/16 - 2 3/8 - 2 7/16 - 2 1/2 - 2 9/16 - 2 5/8 - 2 11/16	5/8 X 5/16
Q2	1 - 1 1/16 - 1 1/8 - 1 3/16 - 1 1/4	1/4 X 1/8
	1 5/16 - 1 3/8	5/16 X 5/32
	1 3/8 - 1 7/16 - 1 1/2 - 1 9/16 - 1 5/8 - 1 11/16 1 3/4	3/8 X 3/16
	1 13/16 - 1 7/8 - 1 15/16 - 2 - 2 1/16 - 2 1/8 - 2 3/16 - 2 1/4	1/2 X 1/4
	2 5/16 - 2 3/8 - 2 7/16 - 2 1/2 - 2 9/16 - 2 5/8	5/8 X 5/16
R1	1 1/8 - 1 3/16 - 1 1/4	1/4 X 1/8
	1 5/16 - 1 3/8	5/16 X 5/32
	1 3/8 - 1 7/16 - 1 1/2 - 1 9/16 - 1 5/8 - 1 11/16 -1 3/4	3/8 X 3/16
	1 13/16 - 1 7/8 - 1 15/16 - 2 - 2 1/16 - 2 1/8 - 2 3/16 - 2 1/4	1/2 X 1/4
	2 5/16 - 2 3/8 - 2 7/16 - 2 1/2 - 2 9/16 - 2 5/8 - 2 11/16 - 2 3/4	5/8 X 5/16
	2 13/16 - 2 7/8 - 2 15/16 - 3 - 3 1/8 - 3 3/16 - 3 1/4	3/4 X 3/8
	3 3/8 - 3 7/16 - 3 1/2 - 3 5/8 - 3 11/16 - 3 3/4	7/8 X 7/16
R2	1 3/8	5/16 X 5/32
	1 3/8 - 1 7/16 - 1 1/2 - 1 9/16 - 1 5/8 - 1 11/16 - 1 3/4	3/8 X 3/16
	1 13/16 - 1 7/8 - 1 15/16 - 2 - 2 1/16 - 2 1/8 - 2 3/16 - 2 1/4	1/2 X 1/4
	2 5/16 - 2 3/8 - 2 7/16 - 2 1/2 - 2 9/16 - 2 5/8 - 2 11/16 - 2 3/4	5/8 X 5/16
	2 13/16 - 2 7/8 - 2 15/16 - 3 - 3 1/8 - 3 3/16 - 3 1/4	3/4 X 3/8
	3 3/8 - 3 7/16 - 3 1/2 - 3 5/8	7/8 X 7/16
S1	1 11/16 - 1 3/4	3/8 X 3/16
	1 7/8 - 1 15/16 - 2 - 2 1/8 - 2 3/16 - 2 1/4	1/2 X 1/4
	2 5/16 - 2 3/8 - 2 7/16 - 2 1/2 - 2 9/16 - 2 5/8 - 2 11/16 - 2 3/4	5/8 X 5/16
	2 7/8 - 2 15/16 - 3 - 3 1/8 - 3 3/16 - 3 1/4	3/4 X 3/8
	3 3/8 - 3 7/16 - 3 1/2 - 3 5/8 - 3 11/16 - 3 3/4	7/8 X 7/16
	3 7/8 - 3 15/16 - 4 - 4 1/8 - 4 3/16 - 4 1/4	1 X 1/2
S2	1 7/8 - 1 15/16 - 2 - 2 1/8 - 2 3/16 - 2 1/4	1/2 X 1/4
	2 5/16 - 2 3/8 - 2 7/16 - 2 1/2 - 2 9/16 - 2 5/8 - 2 11/16 - 2 3/4	5/8 X 5/16
	2 7/8 - 2 15/16 - 3 - 3 1/8 - 3 3/16 - 3 1/4	3/4 X 3/8
	3 3/8 - 3 7/16 - 3 1/2 - 3 5/8 - 3 11/16 - 3 3/4	7/8 X 7/16
	3 7/8 - 3 15/16 - 4 - 4 1/8 - 4 3/16	1 X 1/2
U0*	2 3/8 - 2 7/16 - 2 1/2 - 2 9/16 - 2 5/8 - 2 11/16 - 2 3/4	5/8 X 5/16
	2 7/8 - 2 15/16 - 3 - 3 1/8 - 3 3/16 - 3 1/4	3/4 X 3/8
	3 3/8 - 3 7/16 - 3 1/2 - 3 5/8 - 3 11/16 - 3 3/4	7/8 X 7/16
	3 7/8 - 3 15/16 - 4 - 4 1/8 - 4 3/16 - 4 1/4 - 4 3/8 - 4 7/16 - 4 1/2	1 X 1/2
	4 5/8 - 4 11/16 - 4 3/4 - 4 7/8 - 4 15/16 - 5 - 5 1/8 - 6 3/16 - 5 1/4 - 5 3/8 - 5 7/16 - 5 1/2	1 1/4 X 5/8
U1*	2 3/8 -2 7/16 - 2 1/2 - 2 9/16 - 2 5/8 - 2 11/16 - 2 3/4	5/8 X 5/16
	2 7/8 - 2 15/16 - 3 - 3 1/8 - 3 3/16 - 3 1/4	3/4 X 3/8
	3 3/8 - 3 7/16 - 3 1/2 - 3 5/8 - 3 11/16 - 3 3/4	7/8 X 7/16
	3 7/8 - 3 15/16 - 4 - 4 1/8 - 4 3/16 - 4 1/4 - 4 3/8 - 4 7/16 - 4 1/2	1 X 1/2
	4 5/8 - 4 11/16 - 4 3/4 - 4 7/8 - 4 15/16 - 5 - 5 1/8 - 5 3/16 - 5 1/4 - 5 3/8 - 5 7/16 - 5 1/2	1 1/4 X 5/8
W1*	3 3/8 - 3 7/16 - 3 1/2 - 3 5/8 - 3 11/16 - 3 3/4	7/8 X 7/16
	3 7/8 - 3 15/16 - 4 - 4 1/8 - 4 3/16 - 4 1/4 - 4 3/8 - 4 7/16 - 4 1/2	1 X 1/2
	4 5/8 - 4 3/4 - 4 7/8 - 4 15/16 - 5 - 5 1/8 - 6 3/16 - 5 1/4 - 5 3/8 - 5 7/16 - 5 1/2	1 1/4 X 5/8
	5 5/8 - 5 3/4 - 5 7/8 - 5 15/16 - 6 - 6 1/8 - 6 3/16 - 6 1/4 - 6 3/8 - 6 7/16 - 6 1/2	1 1/2 x 3/4
	6 5/8 - 6 3/4 - 6 7/8 - 6 15/16 - 7 - 7 1/8 - 7 3/16 - 7 1/4 - 7 3/8 - 7 7/16	1 3/4 X 3/4

*Please contact Baldor-Maska for lead time and availability

BALDOR
A MEMBER OF THE ABB GROUP

TAPER-LOCK BUSHINGS

To Install:

1. Clean all parts of the bushing and bore of hub thus removing any oil, lacquer or dirt. Install bushing in hub and match half holes to make complete holes (each complete hole will be threaded on one side only).
2. Oil thread and either the end of set screws or under the head of the cap screws. Install screws loosely in holes that are threaded on the hub side.
3. Make sure that the bushing is free in the hub. Slip assembly onto shaft and align in the desired position.
4. Tighten screws evenly and alternately until the part has tightened. (See table below for wrench torque)
5. Hammer with a block or sleeve the large end of the bushing. Re-tighten screws using the correct torque. Repeat this procedure until the screws no longer turn. Fill remaining holes with grease to prevent dirt buildup.

To Remove:

1. Remove all screws. Oil thread and either the end of set screws or under the head of cap screws.
2. Insert screws in hole(s) that are threaded on the bushing side (see diagram on following page). Note that there will be one extra screw left over.
3. Tighten screws alternately until the bushing is loose in the hub. It may be necessary to tap on the hub to loosen the bushing.

DID YOU KNOW THAT...

- Available in inches & millimeters
- Flush mounting
- Sizes 1008 — 5050

HOW TO ORDER

EXAMPLE: **2012X1-3/8**

2012	X1-3/8

2012: BUSHING SIZE

The Taper-Lock bushing size is defined by 4 digits representing two numbers. The first two digits represent the maximum bore size and the second two digits represent the bushing length. For example, product number 1008 has a max. bore of 1.0" and a total length of 0.8"

X1-3/8: BORE SIZE (1-3/8")

Bore size: Inch bore sizes are designated with the whole inch followed by the fraction. For example, a 1.5" diameter bore would be 1-1/2. Metric bore sizes are designated with "MM" after the metric dimension (X25MM).

PROPER WRENCH TORQUE TO TIGHTEN SCREWS

Bushing No.	SCREWS	Wrench torque (Pounds-Inches)	Wrench torque (Pounds-Feet)
1008, 1108	1/4" Set Screws	55	4.5
1210, 1215, 1310	3/8" Set Screws	175	14.5
1610, 1615	3/8" Set Screws	175	14.5
2012	7/16" Set Screws	280	23.0
2517, 2525	1/2" Set Screws	430	36.0
3020, 3030	5/8" Set Screws	800	67.0
3535	1/2" Cap Screws	1,000	83.0
4040	5/8" Cap Screws	1,700	142.0
4545	3/4" Cap Screws	2,450	204.0
5050	7/8" Cap Screws	3,100	258.0

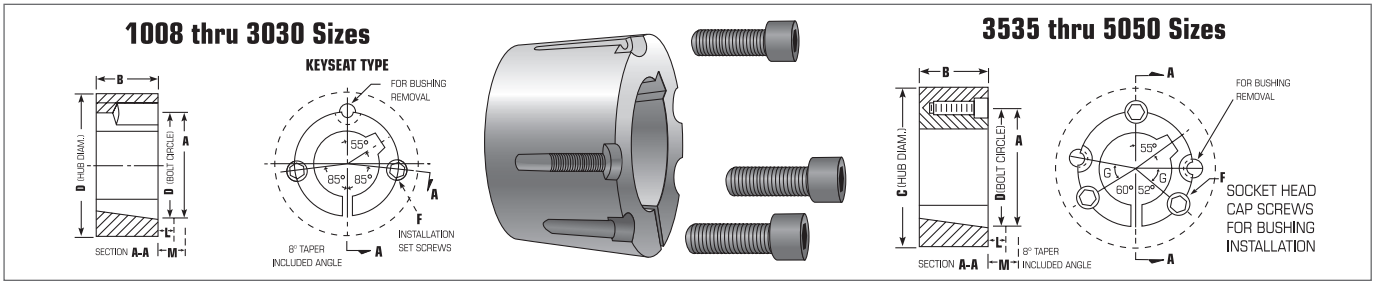

DIMENSIONS FOR 1008 THRU 5050

Bushing Size	Rating • Torque Capacity (lb - in.)	Hub Diam. Ref.				Installation Screw +		G	L *		M *		Approx. Wt. (lbs)
		A	B	C Gray Iron	D	Qty	Size		Std Hex Key	Short Key €	Std Hex Key	Short Key €	
1008	1,200	1 3/8	7/8	2 3/16	1 21/64	2	1/4 x1/2		1 1/8	5/8	1 1/4	3/4	0.2
1108	1,300	1 1/2	7/8	2 5/16	1 29/64	2	1/4 x1/2		1 1/8	5/8	1 1/4	3/4	0.2
1210	3,600	1 7/8	1	3 1/4	1 3/4	2	3/8 x 5/8		1 3/8	13/16	1 5/8	1 1/16	0.5
1215	3,550	1 7/8	1 1/2	2 7/8	1 3/4	2	3/8 x 5/8		1 3/8	13/16	1 5/8	1 1/16	0.3
1310	3,850	2	1	3 3/8	1 7/8	2	3/8 x 5/8		1 3/8	13/16	1 5/8	1 1/16	0.6
1610	4,300	2 1/4	1	3 5/8	2 1/8	2	3/8 x 5/8		1 3/8	13/16	1 5/8	1 1/16	0.7
1615	4,300	2 1/4	1 1/2	3 1/4	2 1/8	2	3/8 x 5/8		1 3/8	1 3/16	1 5/8	1 11/16	1.0
2012	7,150	2 3/4	1 1/4	4 3/8	2 5/8	2	7/16 x 7/8		1 9/16	15/16	2	1 3/8	1.4
2517	11,600	3 3/8	1 3/4	4 7/8	3 1/4	2	1/2 x 1		1 5/8	1	2 1/4	1 5/8	3.1
2525	11,300	3 3/8	2 1/2	4 1/2	3 1/4	2	1/2 x 1		1 5/8	1	2 1/4	1 5/8	3.5
3020	24,000	4 1/4	2	6 1/4	4	2	5/8 x 1 1/4		1 13/16	1 3/16	2 11/16	2 1/16	5.0
3030	24,000	4 1/4	3	5 3/4	4	2	5/8 x 1 1/4		1 13/16	1 3/16	2 11/16	2 1/16	7.4
3535	44,800	5	3 1/2	7	4 27/32	3	1/2 x 1 1/2	39	2	1 5/16	3 3/8	2 11/16	9.8
4040	77,300	5 3/4	4	8 1/2	5 35/64	3	5/8 x 1 3/4	40	2 3/8	1 5/8	4 1/8	3 3/8	15.4
4545	110,000	6 3/8	4 1/2	9 1/2	6 1/8	3	3/4 x 2	40	2 5/8	1 15/16	4 3/4	4 1/16	21.0
5050	126,000	7	5	10 1/2	6 23/32	3	7/8 x 2 1/4	37	2 13/16	2 5/16	5 1/4	4 13/16	29.0

+ Use in position shown in drawing above for tightening bushing on shaft. When loosening bushing, remove screws and use all except one in the other holes.
* Space required to remove bushing using jackscrews - no puller required.
€ Standard hex key cut to minimum useable length.
• Peak torque loads must not exceed torque capacity rating shown. Capacity values shown are for light starting and steady running conditions. For more severe duty, divide torque capacity by service factor suggested in table below.
Note: Approx. weight in lbs. for an average size bore.

SERVICE FACTOR

Service Factor	Type of Loading
1.0	Light starting & steady running
1.5	Light starting & uneven running
2.0	Fairly heavy starting & steady or uneven running
2.5	Light or heavy starting & moderate shock running
3.0	Light or heavy starting & severe shock running, or reversing loads

STANDARD STOCK BORES (INCHES)

Bushing	List Price $	Stock Bore	Keyseat
1008	11.60	1/2 · 9/16 5/8 · 11/16 · 3/4 13/16 · 7/8 15/16 · 1	1/8 x 1/16 3/16 x 3/32 3/16 x 3/32 1/4 x 1/16*
1108	12.00	1/2 · 9/16 5/8 · 11/16 · 3/4 13/16 · 7/8 15/16 · 1 1 1/16 · 1 1/8	1/8 x 1/16 3/16 x 3/32 3/16 x 3/32 1/4 x 1/8 1/4 x 1/16*
1210	12.80	1/2 · 9/16 5/8 · 11/16 · 3/4 13/16 · 7/8 15/16 · 1 · 1 1/16 1 1/8 · 1 3/16 · 1 1/4	1/8 x 1/16 3/16 - 3/32 3/16 - 3/32 1/4 x 1/8 1/4 x 1/8
1215	14.00	1/2 · 9/16 5/8 · 11/16 · 3/4 13/16 · 7/8 15/16 · 1 · 1 1/16 1 1/8 · 1 3/16 · 1 1/4	1/8 x 1/16 3/16 x 3/32 3/16 x 3/32 1/4 x 1/8 1/4 x 1/8
1310	14.40	1/2 · 9/16 5/8 · 11/16 · 3/4 13/16 · 7/8 15/16 · 1 · 1 1/16 1 1/8 · 1 3/16 · 1 1/4 1 5/16 · 1 3/8 1 7/16	1/8 x 1/16 3/16 x 3/32 3/16 x 3/32 1/4 x 1/8 1/4 x 1/8 5/16 x 5/32 3/8 x 1/8
1610	14.80	1/2 · 9/16 5/8 · 11/16 · 3/4 13/16 · 7/8 15/16 · 1 · 1 1/16 1 1/8 · 1 3/16 · 1 1/4 1 5/16 · 1 3/8 1 7/16 · 1 1/2 1 9/16 · 1 5/8 · 1 11/16	1/8 x 1/16 3/16 x 3/32 3/16 x 3/32 1/4 x 1/8 1/4 x 1/8 5/16 x 5/32 3/8 x 3/16 3/8 x 1/8*
1615	15.40	1/2 · 9/16 5/8 · 11/16 · 3/4 13/16 · 7/8 15/16 · 1 · 1 1/16 1 1/8 · 1 3/16 · 1 1/4 1 5/16 · 1 3/8 1 7/16 x 1 1/2 1 9/16 · 1 5/8 · 1 11/16	1/8 x 1/16 3/16 x 3/32 3/16 x 3/32 1/4 x 1/8 1/4 x 1/8 5/16 x 5/32 3/8 x 3/16 3/8 x 1/8*
2012	20.00	1/2 · 9/16 5/8 · 11/16 · 3/4 13/16 · 7/8 15/16 · 1 · 1 1/16 1 1/8 · 1 3/16 · 1 1/4 1 5/16 · 1 3/8 1 7/16 · 1 1/2 · 1 9/16 1 5/8 · 1 11/16 · 1 3/4 1 13/16 · 1 7/8 1 15/16 · 2 2 1/8	1/8 x 1/16 3/16 x 3/32 3/16 x 3/32 1/4 x 1/8 1/4 x 1/8 5/16 x 5/32 3/8 x 3/16 3/8 x 3/16 1/2 x 1/4 1/2 x 3/16* 1/2 x 1/8*

Bushing	List Price $	Stock Bore	Keyseat
2517	24.60	1/2 5/8 · 11/16 · 3/4 13/16 · 7/8 15/16 · 1 · 1 1/16 1 1/8 · 1 3/16 · 1 1/4 1 5/16 · 1 3/8 1 7/16 · 1 1/2 · 1 9/16 1 5/8 · 1 11/16 · 1 3/4 1 13/16 · 1 7/8 1 15/16 · 2 · 2 1/16 2 1/8 · 2 3/16 · 2 1/4 2 5/16 · 2 3/8 · 2 7/16 2 1/2 · 2 5/8 · 2 11/16	1/8 x 1/16 3/16 - 3/32 3/16 - 3/32 1/4 x 1/8 1/4 x 1/8 5/16 x 5/32 3/8 x 3/16 3/8 x 3/16 1/2 x 1/4 1/2 x 1/4 1/2 x 1/4 5/8 x 3/16* 5/8 x 3/16*
2525	36.40	3/4 · 7/8 1 · 1 1/8 · 1 3/16 1 1/4 1 3/8 1 7/16 · 1 1/2 · 1 5/8 1 11/16 · 1 3/4 1 13/16 · 1 7/8 1 15/16 · 2 · 2 1/8 2 3/16 · 2 1/4 2 5/16 · 2 3/8 · 2 7/16 2 1/2	3/16 x 3/32 1/4 x 1/8 1/4 x 1/8 5/16 x 5/32 3/8 x 3/16 3/8 x 3/16 1/2 x 1/4 1/2 x 1/4 1/2 x 1/4 5/8 x 3/16* 5/8 x 3/16*
3020	37.00	7/8 15/16 · 1 · 1 1/8 1 3/16 · 1 1/4 1 5/16 · 1 3/8 1 7/16 · 1 1/2 · 1 9/16 1 5/8 · 1 11/16 · 1 3/4 1 13/16 · 1 7/8 1 15/16 · 2 · 2 1/16 2 1/8 · 2 3/16 · 2 1/4 2 5/16 · 2 3/8 · 2 7/16 2 1/2 · 2 5/8 · 2 11/16 2 3/4 2 13/16 · 2 7/8 · 2 15/16 3 · 3 1/8 · 3 3/16 · 3 1/4	3/16 x 3/32 1/4 x 1/8 1/4 x 1/8 5/16 x 5/32 3/8 x 3/16 3/8 x 3/16 1/2 x 1/4 1/2 x 1/4 1/2 x 1/4 5/8 x 5/16 5/8 x 5/16 5/8 x 5/16 3/4 x 1/4* 3/4 x 1/4*
3030	54.00	15/16 · 1 · 1 1/8 · 1 3/16 1 1/4 1 5/16 · 1 3/8 1 7/16 · 1 1/2 · 1 9/16 1 5/8 · 1 11/16 · 1 3/4 1 13/16 · 1 7/8 · 1 15/16 2 · 2 1/16 · 2 1/8 · 2 3/16 2 1/4 2 5/16 · 2 3/8 · 2 7/16 2 1/2 · 2 5/8 · 2 11/16 2 3/4 2 7/8 · 2 15/16 · 3 3 1/8 · 3 3/16 · 3 1/4	1/4 x 1/8 1/4 x 1/8 5/16 x 3/32 3/8 x 3/16 3/8 x 3/16 1/2 x 1/4 1/2 x 1/4 1/2 x 1/4 5/8 x 5/16 5/8 x 5/16 5/8 x 5/16 3/4 x 1/4* 3/4 x 1/4*

* Shallow keyseat — For all bore sizes key not supplied

STANDARD STOCK BORES (INCHES)

Bushing	List Price $	Stock Bore	Keyseat
3535	76.00	1 3/16 · 1 1/4	1/4 x 1/8
		1 3/8	5/16 x 5/32
		1 7/16 · 1 1/2 · 1 5/8	3/8 x 3/16
		1 11/16 · 1 3/4	3/8 x 3/16
		1 7/8 · 1 15/16 · 2	1/2 x 1/4
		2 1/8 · 2 3/16 · 2 1/4	1/2 x 1/4
		2 3/8 · 2 7/16 · 2 1/2	5/8 x 5/16
		2 5/8 · 2 11/16 · 2 3/4	5/8 x 5/16
		2 7/8 · 2 15/16 · 3	3/4 x 3/8
		3 1/8 · 3 3/16 · 3 1/4	3/4 x 3/8
		3 5/16 · 3 3/8 · 3 7/16	7/8 x 1/4*
		3 1/2 · 3 5/8 · 3 11/16	7/8 x 1/4*
		3 3/4	7/8 x 1/4*
		3 7/8 · 3 15/16	1 x 1/4*
4040	122.00	1 7/16 · 1 1/2 · 1 5/8	3/8 x 3/16
		1 11/16 · 1 3/4	3/8 x 3/16
		1 7/8 · 1 15/16 · 2	1/2 x 1/4
		2 1/8 · 2 3/16 · 2 1/4	1/2 x 1/4
		2 3/8 · 2 7/16 · 2 1/2	5/8 x 5/16
		2 5/8 · 2 11/16 · 2 3/4	5/8 x 5/16
		2 7/8 · 2 15/16 · 3 · 3 1/8	3/4 x 3/8
		3 3/16 · 3 1/4	3/4 x 3/8
		3 3/8 · 3 7/16 · 3 1/2	7/8 x 7/16
		3 5/8	7/8 x 7/16
		3 11/16 · 3 3/4	7/8 x 1/4*
		3 7/8 · 3 15/16 · 4	1 x 1/4*
		4 1/8 · 4 3/16 · 4 1/4	1 x 1/4*
		4 3/8 · 4 7/16	1 x 1/4*
4545	152.00	1 15/16 · 2 · 2 3/16	1/2 x 1/4
		2 3/8 · 2 7/16 · 2 5/8	5/8 x 5/16
		2 3/4	5/8 x 5/16
		2 7/8 · 2 15/16 · 3	3/4 x 3/8
		3 1/8 · 3 3/16 · 3 1/4	3/4 x 3/8
		3 3/8 · 3 7/16 · 3 1/2	7/8 x 7/16
		3 5/8 · 3 3/4	7/8 x 7/16
		3 7/8 · 3 15/16 · 4	1 x 1/2
		4 1/8 · 4 3/16 · 4 1/4	1 x 1/2
		4 3/8 · 4 7/16 · 4 1/2	1 x 1/4*
		4 3/4 · 4 7/8 · 4 15/16	1 1/4 x 1/4*
5050	246.00	2 7/16 · 2 11/16	5/8 x 5/16
		2 15/16	3/4 x 3/8
		3 3/8 · 3 7/16 · 3 5/8	7/8 x 7/16
		3 7/8 · 3 15/16 · 4	1 x 1/2
		4 1/4 · 4 3/8 · 4 7/16	1 x 1/2
		4 1/2	1 x 1/2
		4 7/8 · 4 15/16 · 5	1 1/4 x 7/16*

* Shallow keyseat For all bore sizes key not supplied

STANDARD STOCK BORES (MILLIMETERS)

Bushing	List Price $	Stock Bore	Key
1008	11.60	14 · 16 18 · 19 · 20 · 22 (24)	5 x 5 6 x 6 8 x 7
1108	12.00	(12) 14 · (15) · 16 18 · 19 · 20 · 22 24 · 25	4 x 4 5 x 5 6 x 6 8 x 7
1210	12.80	14 · (15) · 16 18 · 19 · 20 · 22 24 · 25 · 28 · 30 (32)	5 x 5 6 x 6 8 x 7 10 x 8
1215	14.00	16 19 · 20 24 · 25 · 28 · 30 32	5 x 5 6 x 6 8 x 7 10 x 8
1310	14.40	14 · 16 18 · 19 · 20 · 22 24 · 25 · 28 · 30 32 · 35	5 x 5 6 x 6 8 x 7 10 x 8
1610	14.80	14 · 16 18 · 19 · 20 · 22 24 · 25 · 28 · 30 32 · 35 · 38 40	5 x 5 6 x 6 8 x 7 10 x 8 12 x 8
1615	15.40	12 14 · 15 · 16 18 · 19 · 20 · 22 24 · 25 · 28 · 30 32 · 35 · 36 · 38 39 · 40 42	4 x 4 5 x 5 6 x 6 8 x 7 10 x 8 12 x 8 12 x 7*
2012	20.00	14 · 16 18 · 19 · 20 · 22 24 · 25 · 28 · 30 32 · 35 · 38 40 · 42 45 · 48	5 x 5 6 x 6 8 x 7 10 x 8 12 x 8 14 x 9
2517	24.60	14 · 16 18 · 19 · 20 · 22 24 · 25 · 28 · 30 32 · 35 · 38 40 · 42 45 · 48 · 50 55 60 · 65	5 x 5 6 x 6 8 x 7 10 x 8 12 x 8 14 x 9 16 x 10 18 x 11

( ) = Contact Baldor for availability
* Shallow keyseat
For all bore sizes key not supplied

Bushing	List Price $	Stock Bore	Key
2525	36.40	19 · 20 · 22 24 · 25 · 28 · 30 32 · 35 · 36 · 38 39 · 40 · 42 45 · 48 · 50 55 60	6 x 6 8 x 7 10 x 8 12 x 8 14 x 9 16 x 10 18 x 11
3020	37.00	24 · 25 · 28 · 30 32 · 35 · 38 40 · 42 45 · 48 · 50 55 60 · 65 70 · 75	8 x 7 10 x 8 12 x 8 14 x 9 16 x 10 18 x 11 20 x 12
3030	54.00	22 24 · 25 · 28 · 30 32 · 35 · 36 · 38 39 · 40 · 42 45 · 48 · 50 55 60 · 65 70 · 75	6 x 6 8 x 7 10 x 8 12 x 8 14 x 9 16 x 10 18 x 11 20 x 12
3535	76.00	35 · 38 40 · 42 45 · 48 · 50 55 60 · 65 70 · 75 80 · 85 90	10 x 8 12 x 8 14 x 9 16 x 10 18 x 11 20 x 12 22 x 14 25 x 14
(4040)	122.00	48 55 60 · 65 70 · 75 80 · 85 90 · 95 100 · 110	14 x 9 16 x 10 18 x 11 20 x 12 22 x 14 25 x 14 28 x 16
(4545)	152.00	55 60 · 65 70 · 75 80 · 85 90 · 95 100 · 105 · 110 115 · 120	16 x 10 18 x 11 20 x 12 22 x 14 25 x 14 28 x 16 32 x 18
(5050)	246.00	55 60 · 65 70 · 75 80 · 85 90 · 95 100 · 110 115 · 120 · 125	16 x 10 18 x 11 20 x 12 22 x 14 25 x 14 28 x 16 32 x 18

"SHORT" QD BUSHINGS

Usage: For applications when the full bore length is not needed, such as in conveyor applications or with a roller chain sprocket.

DID YOU KNOW THAT...

- All sizes with a shallow keyseat are in DUCTILE iron for greater strength
- Same features as the standard QD bushing with the exception that the total length is reduced to adapt to a QD weld-on hub
- Full, not partial split
- Sizes J, M, N, P, W (S is available in rough bore only)

HOW TO ORDER

EXAMPLE: **MSX4-7/16**

MS **X4-7/16**

MS: BUSHING SIZE

X4-7/16: BORE SIZE (4-7/16")

Inch bore sizes are designated with the whole inch folowed by the fraction. For example, a 1.5" diameter bore would be 1-1/2.

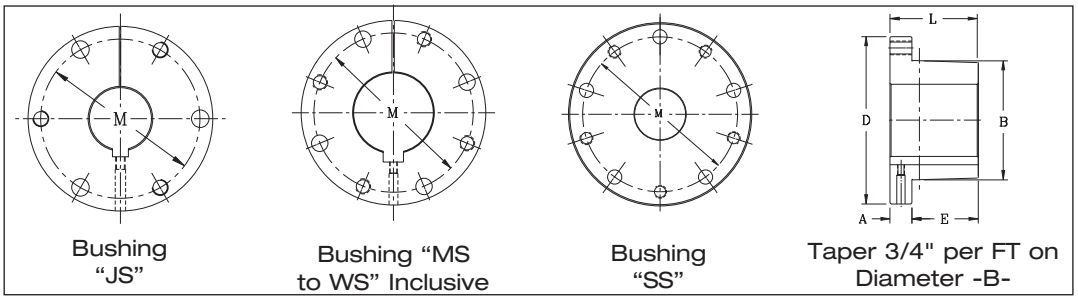

Bushing "JS" | Bushing "MS to WS" Inclusive | Bushing "SS" | Taper 3/4" per FT on Diameter -B-

DIMENSIONS

Bushing Size	List Price $	Dimensions - Inches						Bore range		Installation Screw	
		A	B	D	E	L	M	Min.	Max.	Qty	Size
JS	144.00	1	5 5/32	7 1/4	2 3/8	3 3/8	6 1/4	2 7/16	4 7/16	3	5/8-11NC X 2-1/2
MS	288.00	1 3/16	6 1/2	9 1/8	3 5/8	4 13/16	7 7/8	3 7/16	5 7/16	4	3/4-10NC X 3
NS	504.00	1 1/2	7	10	4 1/2	6	8 1/2	3 15/16	6	4	7/8-9NC X 3-1/2
PS	756.00	1 1/2	8 1/4	11 3/4	5	6 1/2	10	4 15/16	7	4	1-8NC X 4
WS	1332.00	1 3/4	10 7/16	15	5 1/2	7 1/4	12 3/4	5 7/16	8 1/2	4	1 1/8-7NC X 5
SS	*	2	12 1/8	17 3/4	6 3/4	8 3/4	15	4 15/16*	10*	5	1/1/4-7NC X 5

* Stocked in rough bore only. Can be rebored from 4-15/16" to 10" max. Contact Baldor for price and delivery

STANDARD STOCK BORES

Bushing	Stock Bore	Keyseat	Approx. Weight (lbs.)
JS	2 7/16	5/8 x 5/16	20.0
	2 15/16	3/4 x 3/8	18.1
	3 7/16	7/8 x 7/16	15.9
	3 15/16	1 x 3/8**	14.3
	4 7/16	1 x 1/8**	11.5
MS	3 7/16	7/8 x 7/16	41.2
	3 15/16 · 4 7/16	1 x 1/2	35.3
	4 15/16 · 5 7/16	1 1/4 x 1/4**	28.4
NS	3 15/16 · 4 7/16	1 x 1/2	59.4
	4 15/16	1 1/4 x 5/8	46.5
	5 7/16	1 1/4 x 1/4**	43.9
	5 15/16 · 6	1 1/2 x 1/8**	38.9

Bushing	Stock Bore	Keyseat	Approx. Weight (lbs.)
PS	4 15/16 · 5 7/16	1 1/4 x 5/8	84.8
	5 15/16 · 6	1 1/2 x 3/4	77.9
	6 7/16 · 6 1/2	1 1/2 x 1/4**	69.5
	6 15/16 · 7	1 3/4 x 1/8**	60.9
WS	5 7/16		
	5 15/16 · 6 7/16 · 6 1/2	1 1/4 x 5/8	172.3
		1 1/2 x 3/4	156.4
	6 15/16 · 7 · 7 1/2	1 3/4 x 3/4	138.6
	7 15/16 · 8 · 8 7/16 · 8 1/2	2 x 1/4**	116.5
SS	4 15/16RB*	None	280.0

* Stocked in rough bore only. Can be rebored from 4-15/16" to 10" max. ** Shallow keyseat. Key provided with these sizes only.

Note: Refer to QD Bushing Mounting page for installation instructions. (pg. 9)

"QD" WELD-ON HUBS

Usage: For many applications, such as conveyor drum pulleys, rotors, plate sprockets, impellers, etc.

DID YOU KNOW THAT...

Baldor•Maska QD weld-on hubs are made of low carbon steel for its excellent welding properties, and are compatible with all standard QD bushings, with the exception of SD.

HOW TO ORDER

EXAMPLE: **H-M**

H **M**

H: QD WELD-ON HUB

M: HUB SIZE (RELATED TO QD BUSHING)

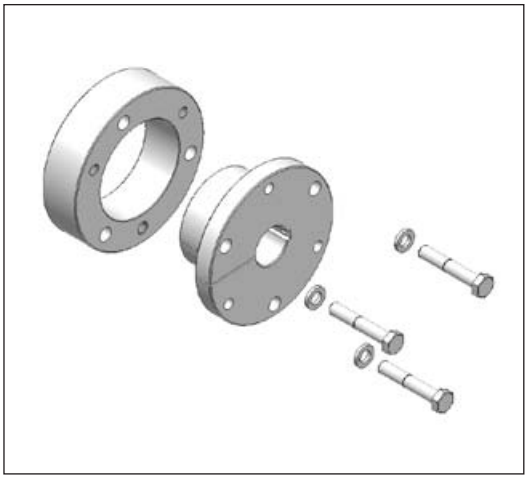

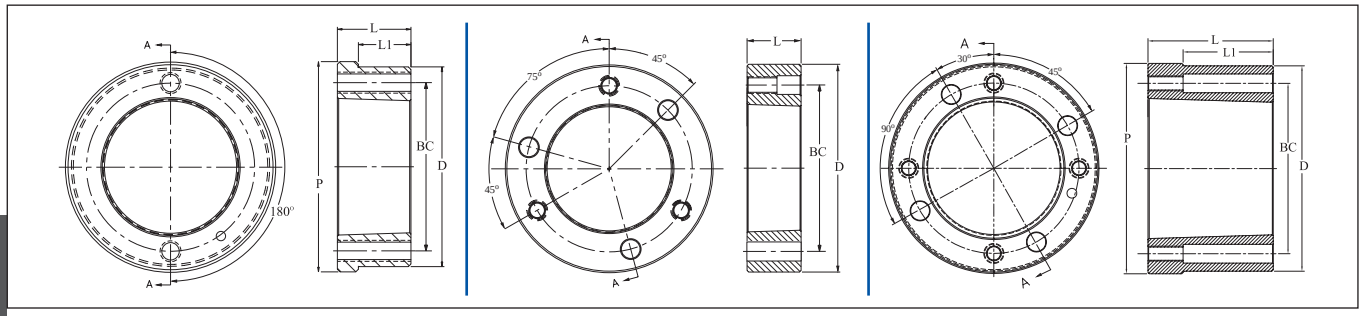

Type 1 Type 2 Type 3

DIMENSIONS

Part No.	List Price $	Fits Bushing	Type	Dimensions - Inches					Bore Range	Approx. Weight
				D*	L	P	L1	BC		
H-L	9.00	L	1	2.375	0.88	2.50	0.17	2	3/8 to 1 1/2"	0.6
H-CL	9.00	L	1	2.375	0.88	2.50	0.63	2	3/8 to 1 1/2"	0.6
H-JA	9.00	JA	2	2.250	0.56	...	...	1 21/32	1/2 to 1 1/4"	0.4
H-SH	15.00	SH	2	3.000	0.81	...	...	2 1/4	1/2 to 1 11/16"	1
H-SDS	14.00	SDS	2	3.500	0.75	...	...	2 11/16	1/2 to 2"	1.2
H-SK	27.00	SK	2	4.375	1.25	...	...	3 5/16	1/2 to 2 5/8"	3
H-SF	35.00	SF	2	5.000	1.25	...	...	3 7/8	1/2 to 2 15/16"	4
H-E	72.00	E	2	6.250	1.63	...	...	5	7/8 to 3 1/2"	8.3
H-F	120.00	F	2	7.000	2.50	...	...	5 5/8	1 to 4"	15.5
H-J	175.00	J	2	7.750	3.19	...	...	6 1/4	1 7/16 to 4 1/2"	22.7
H-M	310.00	M	3	9.250	5.19	9.50	3.56	7 7/8	2 to 5 1/2"	50
H-N	460.00	N	3	10.250	6.25	10.50	4.50	8 1/2	2 3/4 to 6"	77
H-P ¬	1460.00	P	2	13.000	7.25	...	...	10	2 15/16 to 7"	155
H-W ¬	2300.00	W	2	15.500	9.00	...	...	12 3/4	4 1/4 to 8 1/2"	260

Mounting: **Type 1:** Reverse mount only **Type 2 & 3:** Standard and Reverse mount **¬:** Standard mount only
*Tolerance: **H-L & H-CL** = (+0.001"/-0.005") **H-JA thru H-J** = (+0.000"/-0.002") **H-M thru H-W** = (+0.000"/-0.003")

Part No.	List Price $	Fits Bushing	Dimensions - Inches					Bore Range	Approx. Weight
			D*	L	P	L1	BC		
HD-SH	17.00	SH	2.8125	0.750	3.063	0.375	2-1/4	1/2" TO 1-11/16"	0.87
HD-SDS	16.00	SDS	3.375	0.750	3.625	0.375	2-11/16	1/2" TO 2"	1.27
HD-SK	35.00	SK	4.375	1.125	4.750	0.500	3-5/16	1/2" TO 2-5/8"	3.34
HD-SF	46.00	SF	5.000	1.250	5.250	0.625	3-7/8	1/2" TO 2-15/16"	4.67
HD-E	88.00	E	6.250	1.500	6.500	0.875	5	7/8" to 3-1/2"	8.72
HD-F	140.00	F	6.625	1.750	6.938	1.063	5-5/8	1" to 4"	10.3

*Tolerance: = +0.000" / -0.002"

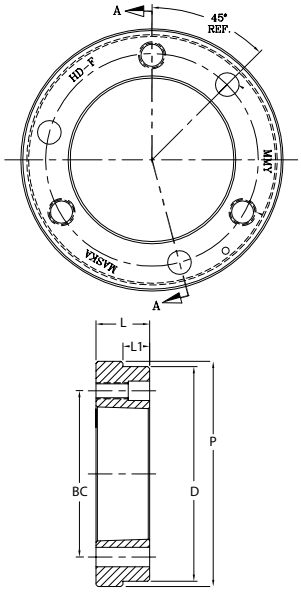

HD-SH to HD-F

XT BUSHINGS

Usage: This product is specially designed for conveyor pulley applications.

DID YOU KNOW THAT...

- 2"/ft. taper for easy on, easy off
- In steel, Ductile iron & gray cast iron

IMPORTANT REMINDER

For the first month of operation, inspect bushings and capscrews for proper seating at least once a week and thereafter during periodic shut down.

HOW TO ORDER

EXAMPLE: **XTB20X2**

XTB	20	X2

XTB: XT BUSHING

20: BUSHING SIZE
Means that the maximum bore for this bushing is 2.0"

X2: BORE SIZE (2")
Inch bore sizes are designated with the whole inch following by fraction. For example, a 1.5" diameter bore would be 1-1/2.

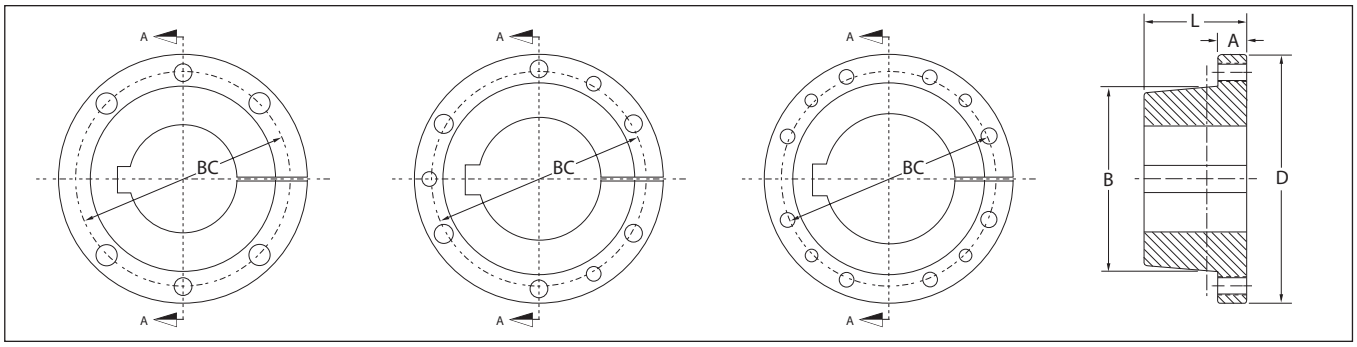

XTB15 TO XTB80 INCLUSIVE

XTB100

XTB120

SECTION A-A
Taper 2" per ft.
on diameter -B-

DIMENSIONS

Bushing Size	List Price $	Dimensions - Inches					Bolts		Recommended Wrench Torque (ft-lbs)	Approx. Weight
		A	B	D	L	BC	QTY	Size		
XTB15	16.00	3/8	2.000	2 7/8	1 1/8	2 7/16	4	1/4-20NC x 1"	7.9	0.7
XTB20	33.00	15/32	2.688	3 3/4	1 13/32	3 3/16	4	5/16-18NC x 1-1/4"	16.7	1.5
XTB25	58.00	5/8	3.188	4 7/16	1 7/8	3 3/4	4	3/8-16NC x 1 3/4"	29.2	2.6
XTB30	87.00	11/16	3.875	5 5/16	2 1/16	4 9/16	4	7/16-14NC x 1 1/2"	45.8	4.2
XTB35	139.00	25/32	4.688	6 5/16	2 15/32	5 7/16	4	1/2-13NC x 1 3/4"	70	7.4
XTB40	190.00	7/8	5.313	7 1/8	2 13/16	6 1/8	4	9/16-12NC x 2"	100	10.5
XTB45	271.00	15/16	5.938	8	3 5/16	6 7/8	4	5/8-11NC x 2-1/4"	140	14.8
XTB50	490.00	1	7.250	10 1/8	3 3/4	8 5/16	4	3/4-10NC x 2 1/2"	250	27.8
XTB60	673.00	1 1/8	8.625	11 15/16	4 1/8	9 7/8	4	7/8-9NC x 2-1/2"	400	42.8
XTB70	887.00	1 5/16	10.000	13 15/16	4 11/16	11 9/16	4	1-8NC x 3"	600	66.3
XTB80	1719.00	1 3/8	11.125	15 5/8	5 1/8	12 7/8	4	1 1/8-7NC x 3 1/2"	750	85.7
XTB100	2243.00	1 9/16	13.688	17 15/16	6 3/16	15 9/16	6	1 1/8-7NC x 3 1/2"	750	146
XTB120	3194.00	1 3/4	16.188	20 5/8	7 1/16	18 3/16	8	1 1/8-7NC x 3 1/2"	750	216

STANDARD STOCK BORES

Bushing	Stock Bore	Keyseat
XTB15	5/8* · 3/4* · 7/8* 1* · 1 1/8* · 1 3/16* 1 1/4* 1 7/16* · 1 1/2*	3/16 x 3/32 1/4 x 1/8 1/4 x 1/8 3/8 x 1/8**
XTB20	3/4 1 · 1 3/16 · 1 1/4 1 7/16 · 1 1/2 1 11/16 1 15/16* · 2*	3/16 x 3/32 1/4 x 1/8 3/8 x 3/16 3/8 x 3/16 1/2 x 3/16**
XTB25	1 · 1 3/16 · 1 1/4 1 7/16 · 1 1/2 · 1 11/16 1 15/16 · 2 · 2 3/16* 2 7/16*	1/4 x 1/8 3/8 x 3/16 1/2 x 1/4 5/8 x 1/8**
XTB30	1 7/16 · 1 1/2 1 15/16 · 2 3/16 2 7/16 · 2 11/16* 2 15/16*	3/8 x 3/16 1/2 x 1/4 5/8 x 5/16 3/4 x 3/16**
XTB35	1 15/16 · 2 3/16 2 7/16* · 2 11/16* 2 15/16* 3 7/16*	1/2 x 1/4 5/8 x 5/16 3/4 x 3/8 7/8 x 5/16**

Bushing	Stock Bore	Keyseat
XTB40	2 7/16 2 15/16 3 7/16* 3 15/16*	5/8 x 5/16 3/4 x 3/8 7/8 x 7/16 1 x 3/8**
XTB45	3 7/16 3 15/16* 4 7/16*	7/8 x 7/16 1 x 1/2 1 x 3/8**
XTB50	3 15/16 · 4 7/16 4 15/16	1 x 1/2 1 1/4 x 5/8
XTB60	5 7/16 · 5 1/2 5 15/16 · 6	1 1/4 x 5/8 1 1/2 x 3/4
XTB70	6 7/16 · 6 1/2 6 15/16 · 7	1 1/2 x 3/4 1 3/4 x 3/4
XTB80	7 1/2 7 15/16 · 8	1 3/4 x 3/4 2 x 3/4
XTB100	8 1/2 · 9 9 7/16 · 9 1/2 · 10	2 x 3/4 2 1/2 x 7/8
XTB120	10 1/2 · 11 11 1/2 · 12	2 1/2 x 7/8 3 x 1

* These bushings are ductile iron; all others are cast iron.
** Key provided with these sizes only.

BALDOR
A MEMBER OF THE ABB GROUP

XT HUBS

Usage: XT hubs are for use with the XT Bushing.

DID YOU KNOW THAT...

- 2"/ft. taper for easy on, easy off
- Made of low carbon steel for its excellent welding properties

HOW TO ORDER

EXAMPLE: **XTH20**

XTH **20**

XTH: XT HUB

20: HUB SIZE
Related to the XT bushing

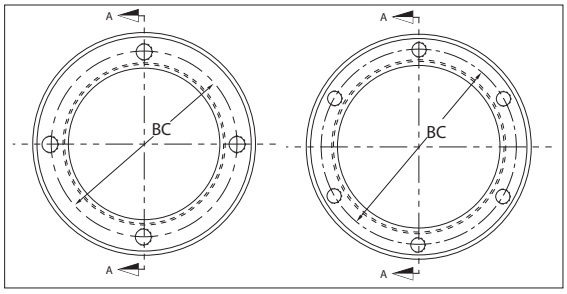

XTH15 to XTH80 Inclusive

XTH100

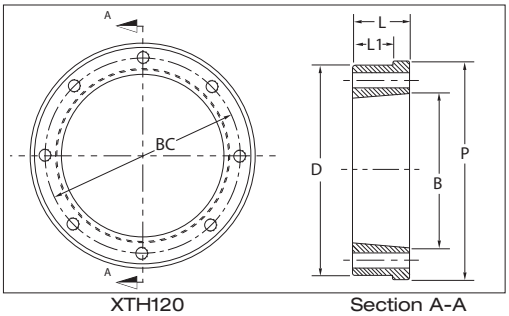

XTH120

Section A-A
Taper 2" per ft.
on Diameter -B-

DIMENSIONS

Hub No.	List Price $	Fits Bushing	Dimensions - Inches						Tapped Holes		Approx. Weight
			D*	L	B	P	L	BC	No.	Size	
XTH15	8.00	XTB15	2.875	5/8	2.000	3.190	7/16	2 7/16	4	1/4-20NC	0.7
XTH20	15.00	XTB20	3.813	13/16	2.688	4.065	9/16	3 3/16	4	5/16-18NC	1.5
XTH25	25.00	XTB25	4.375	1 1/8	3.188	4.690	13/16	3 3/4	4	3/8-16NC	2.6
XTH30	43.00	XTB30	5.750	1 1/4	3.875	5.940	7/8	4 9/16	4	7/16-14NC	4.1
XTH35	55.00	XTB35	6.345	1 1/2	4.688	6.565	1 1/16	5 7/16	4	1/2-13NC	6.6
XTH40	85.00	XTB40	7.250	1 3/4	5.313	7.563	1 1/4	6 1/8	4	9/16-12NC	10.7
XTH45	109.00	XTB45	8.000	2 1/8	5.938	8.315	1 1/2	6 7/8	4	5/8-11NC	15.4
XTH50	173.00	XTB50	9.563	2 1/2	7.250	9.940	1 3/4	8 5/16	4	3/4-10NC	24.9
XTH60	267.00	XTB60	11.250	2 3/4	8.625	11.690	1 15/16	9 7/8	4	7/8-9NC	36.4
XTH70	334.00	XTB70	13.188	3 1/8	10.000	13.628	2 3/16	11 9/16	4	1-8NC	57.7
XTH80	425.00	XTB80	14.625	3 7/16	11.125	14.940	2 7/16	12 7/8	4	1 1/8-7NC	75.6
XTH100	699.00	XTB100	17.500	4 1/8	13.688	17.940	3	15 9/16	6	1 1/8-7NC	122
XTH120	1059.00	XTB120	20.500	4 13/16	16.188	20.940	3 1/2	18 3/16	8	1 1/8-7NC	189

* Tolerance: (+0.000"/-0.005")

Conveyor
Drum
Application

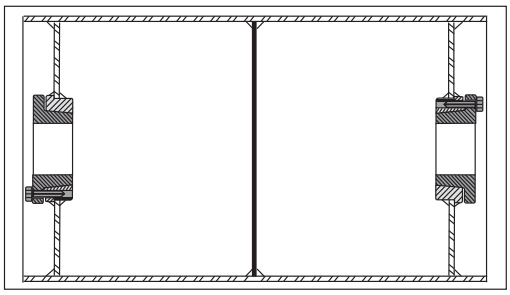

V-BELT DRIVE SHEAVES

GENERAL INFORMATION

- **Light Duty**
- **Adjustable Pitch**
- **Classical V-belt**
- **Narrow V-belt**

DID YOU KNOW THAT...

- Elasticity of belts helps shock load dampening
- Good mechanical efficiency
- Long-life expectancy when well designed
- Quiet, smooth operation; no lubrification required
- Easy and economical installation
- Clean and low maintenance

IMPORTANT REMINDER

DO NOT use these gray cast iron sheaves with rim speeds in excess of 6500 feet per minute. Note that the maximum RPM indicated on the sheave is based on the 6500 ft/min. limit and doesn't take into consideration the need for dynamic balancing (two planes). Please refer to the chart on page 30 to verify the validity of dynamic balancing in your application.

All operational PT products when used in a drive are potentially dangerous and must be guarded by the user as required by applicable laws, regulations, standards and good safety practice. (Refer to ANSI Standard B15.1)

DYNAMIC BALANCING

When ordering a sheave to be dynamically balanced, you must specify the sheave operational speed. Baldor recommends ordering the matching bushing with the sheave to ensure a balancing grade of G6.3. If the bushing is not ordered at the same time, a disclaimer will be sent to the customer discharging Baldor from possible vibration problems related to the drive.

BALANCING STANDARDS

NOMOGRAPH

This nomograph shows the maximum speed limit (in RPM) for a gray cast iron standard statically balanced pulley of a given diameter and face width. To exceed this speed limit, the pulley should also be dynamically balanced.

Example: If you have a 6-8V14.0 pulley (see 8V section) with a diameter of 14" and a face width of 7 1/8", and it must turn at 1,800 RPM, what type of balancing is required?

Answer: As shown, the limit for this pulley would be 1,500 RPM, therefore it must be dynamically balanced.

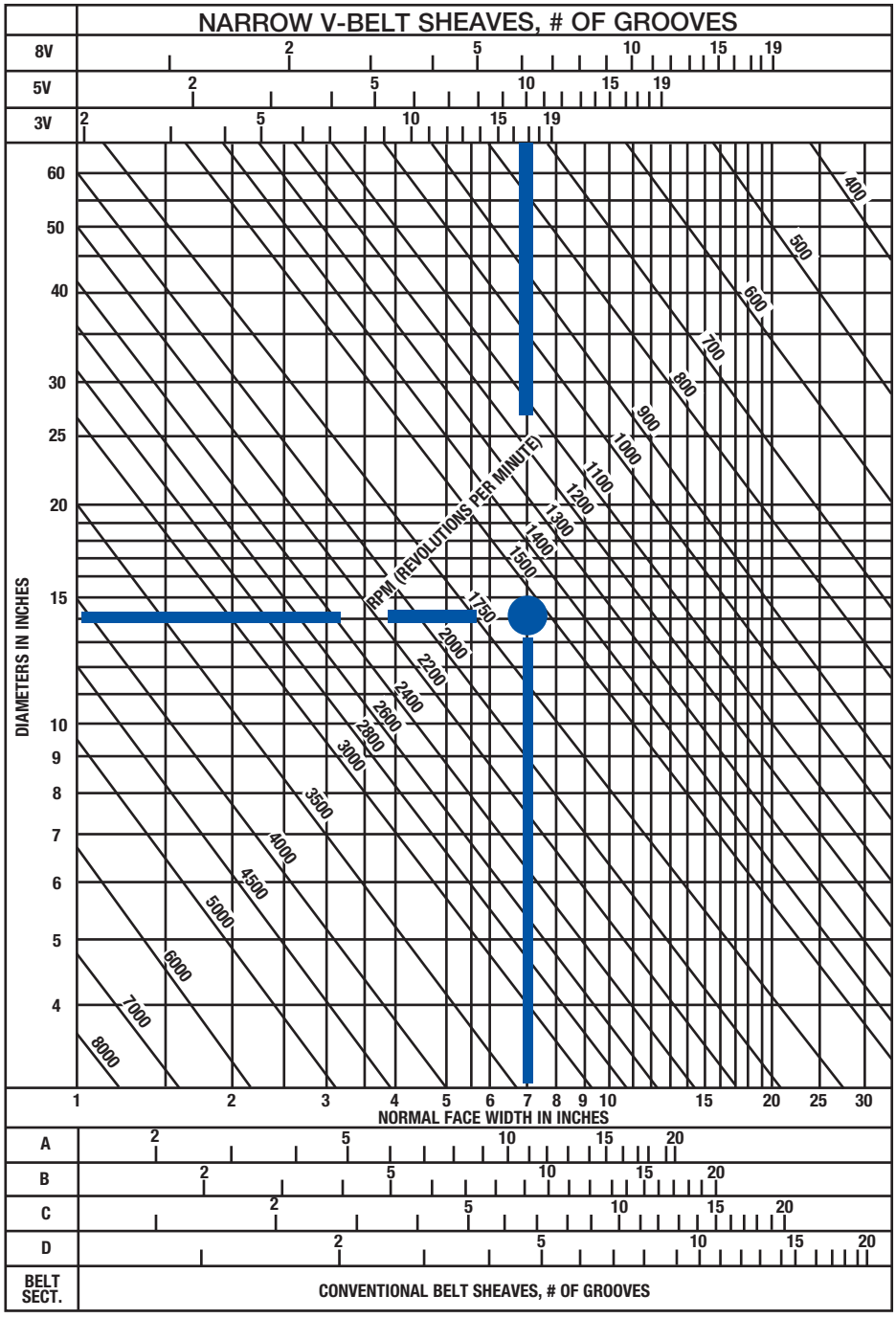

SHEAVES

COMPLEMENTARY INFORMATION

RATIO

A ratio is a proportional factor between two similar objects of different sizes. In a belt drive system, a ratio is used to determine the speed relation between two pulleys. The speed ratio would be stable if slippage did not occur; however as belt slip is inevitable, the ratio varies and is therefore only theoretical. If the speed ratio is < 1 (ex. 1:4), we refer to a speed up system; if the ratio is > 1 (ex. 4:1), it's a speed reduction system. In both cases, the ratio is obtained using the dimensions of the input drive (driver) pulley and the output (driven) pulley.

In the following ratio, RS is the speed ratio, D1 the diameter of the driver pulley, D2 the diameter of the driven pulley:

$$R_s = \frac{RPM_1}{RPM_2} = \frac{D_2}{D_1}$$

SPEED & VELOCITY

With reference to a belt drive system, the formula to find rim speed, or belt speed, is:

Rim Speed [ft/min] = **Pulley Diameter** [in] x π x **RPM** x $^1/_{12}$ [ft/in]

OR

FPM = Pulley Diameter [in] x 0.2618 x **RPM**

POWER

In mechanical engineering, power is a measure of performance or capacity and is defined as the amount of work performed in a given time. The most work accomplished in the least amount of time, equals greater power. This formula also shows the relation between torque and HP.

Power in hp (HP) can be calculated using the following formulas:

$$HP = \frac{T[lb \cdot in]RPM}{63025}$$

OR

$$HP = \frac{T[lb \cdot ft]RPM}{5252}$$

HP can be converted to kilowatts as follows:

HP = Kilowatts X 1.341

DYNAMIC OR TWO-PLANE BALANCING

When considering dynamic balance, it is necessary to determine when dynamic balancing is recommended.

To determine whether dynamic balancing is recommended, perform the following calculation or refer to the nomograph on the previous page.

$$RPM = 15{,}500/\sqrt{(DF)}$$

D is diameter in inches
F is Face Width in inches

OR

$$RPM = 25.4x15{,}500/\sqrt{(DF)}$$

D is diameter in millimeters
F is Face Width in millimeters

The resultant RPM is maximum recommended operating rpm for a sheave or pulley with a single plane balance.
Note: If the sheave or pulley is to be operated at a higher speed, a two plane balance is recommended.

According to RMA Standards

FIGURE 1: CLASSICAL V-BELTS

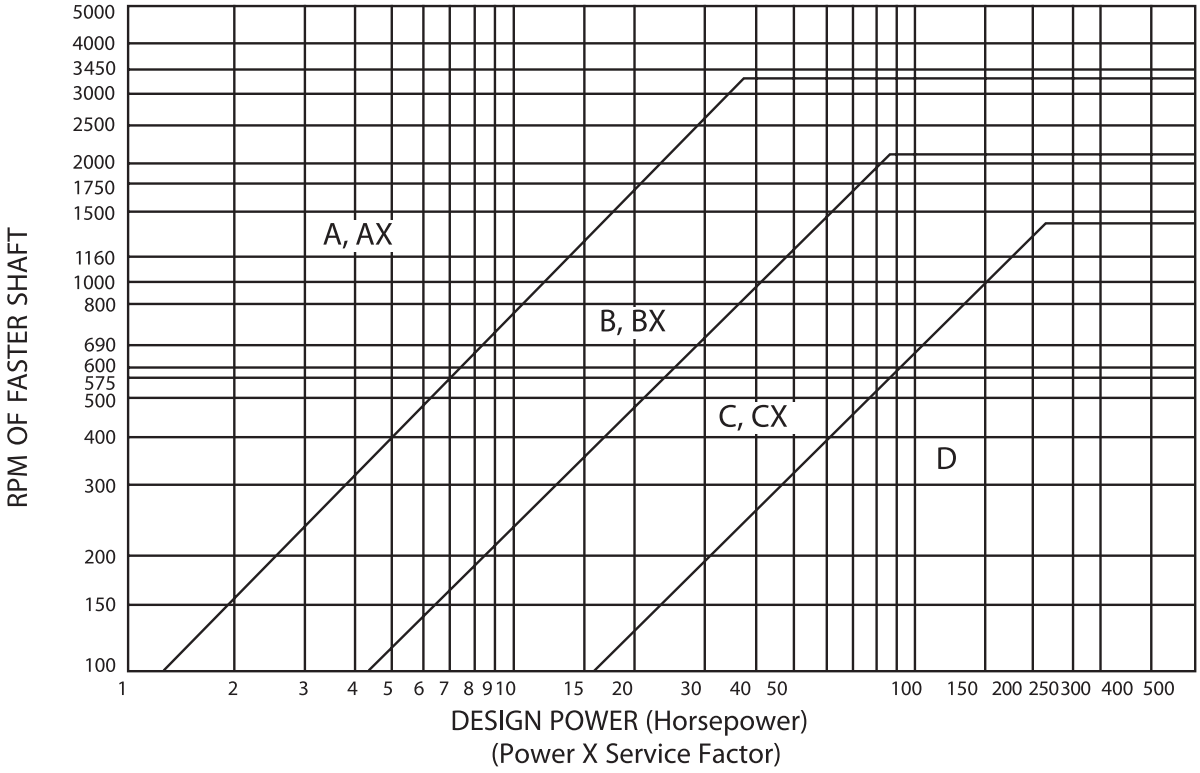

FIGURE 2: NARROW V-BELTS

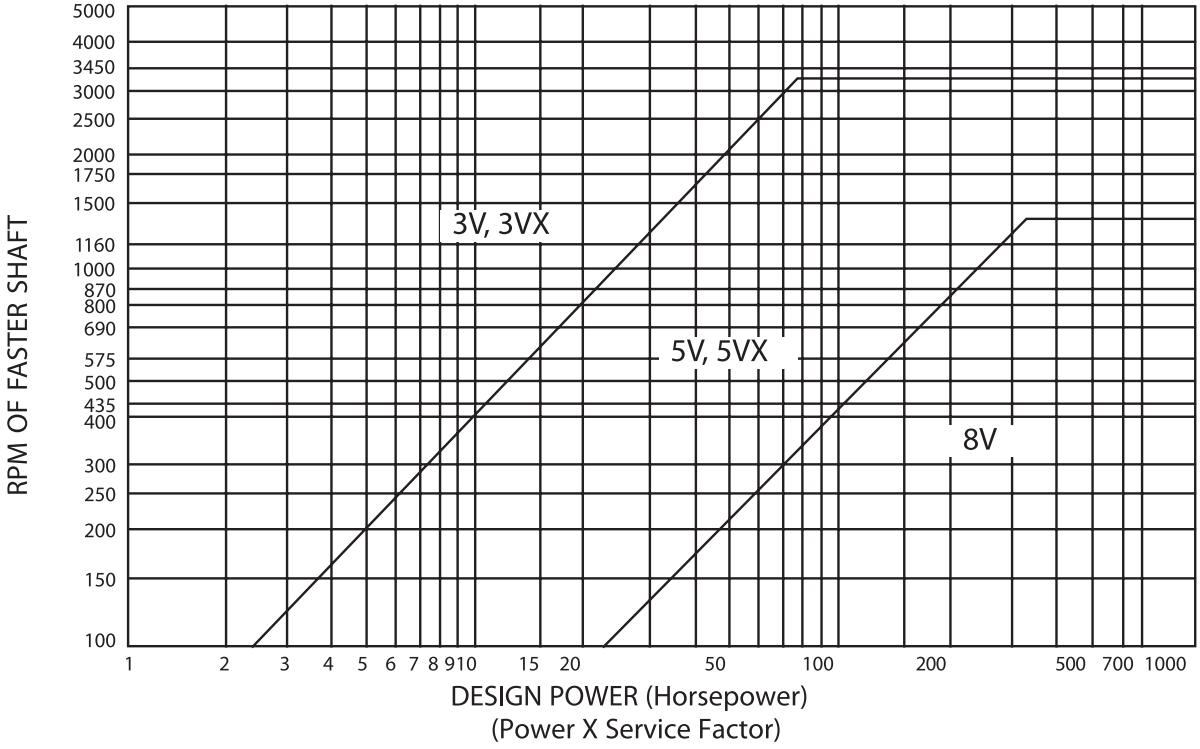

V-BELT DRIVES INDEX

GENERAL LIGHT DUTY SHEAVES INFORMATION 35 - 36

LIGHT DUTY FIXED BORE SHEAVES
MA & 2MA; MB & 2MB
PAGE 37 TO 40

LIGHT DUTY BUSH TYPE SHEAVES
MAL & 2MAL; MBL & 2MBL
PAGE 41 TO 44

FRACTIONAL FIXED BORE (F.H.P.) SHEAVES
MFAL SERIES
PAGE 45 TO 46

FIXED BORE STEP PULLEYS
MAS
PAGE 47 TO 48

COMPLEMENTARY ACCESSORY
REDUCER BUSHINGS
PAGE 49

SHEAVES

GENERAL ADJUSTABLE PITCH SHEAVES INFORMATION 50

ADJUSTABLE PITCH LIGHT DUTY (H.V.A.C.) SHEAVES
MVL SERIES PAGE 51 TO 52

8000 SERIES PAGE 53 TO 55

VP SERIES PAGE 56 TO 58

HEAVY DUTY ADJUSTABLE PITCH SHEAVES
MVS PAGE 59 TO 60

CLASSICAL V-BELT SHEAVES

"A/B" COMBINATION PAGE 61 TO 71
"C" SECTION PAGE 72 TO 80
"D" SECTION PAGE 81 TO 84

NARROW V-BELT SHEAVES

"3V" SECTION PAGE 85 TO 91
"5V" SECTION PAGE 92 TO 100
"8V" SECTION PAGE 101 TO 106

LIGHT DUTY SHEAVES

IMPORTANT REMINDER

CAUTION: DO NOT use these gray cast iron sheaves with rim speeds in excess of 6500 feet per minute. Note that the max. RPM indicated on the arm of the sheave is based on the 6500 ft/min. limit, and doesn't take into consideration the need for dynamic balancing (two planes). Please refer to page 30 to verify the validity of dynamic balancing in your application.

All operational PT products when used in a drive are potentially dangerous and must be guarded by the user as required by applicable laws, regulations, standards and good safety practice. (Refer to ANSI Standard B15.1)

All Charts: The type of sheave construction is indicated in the column entitled "T". The number refers to the drawing and the letter as follows: A = arms; B = block; W = web.

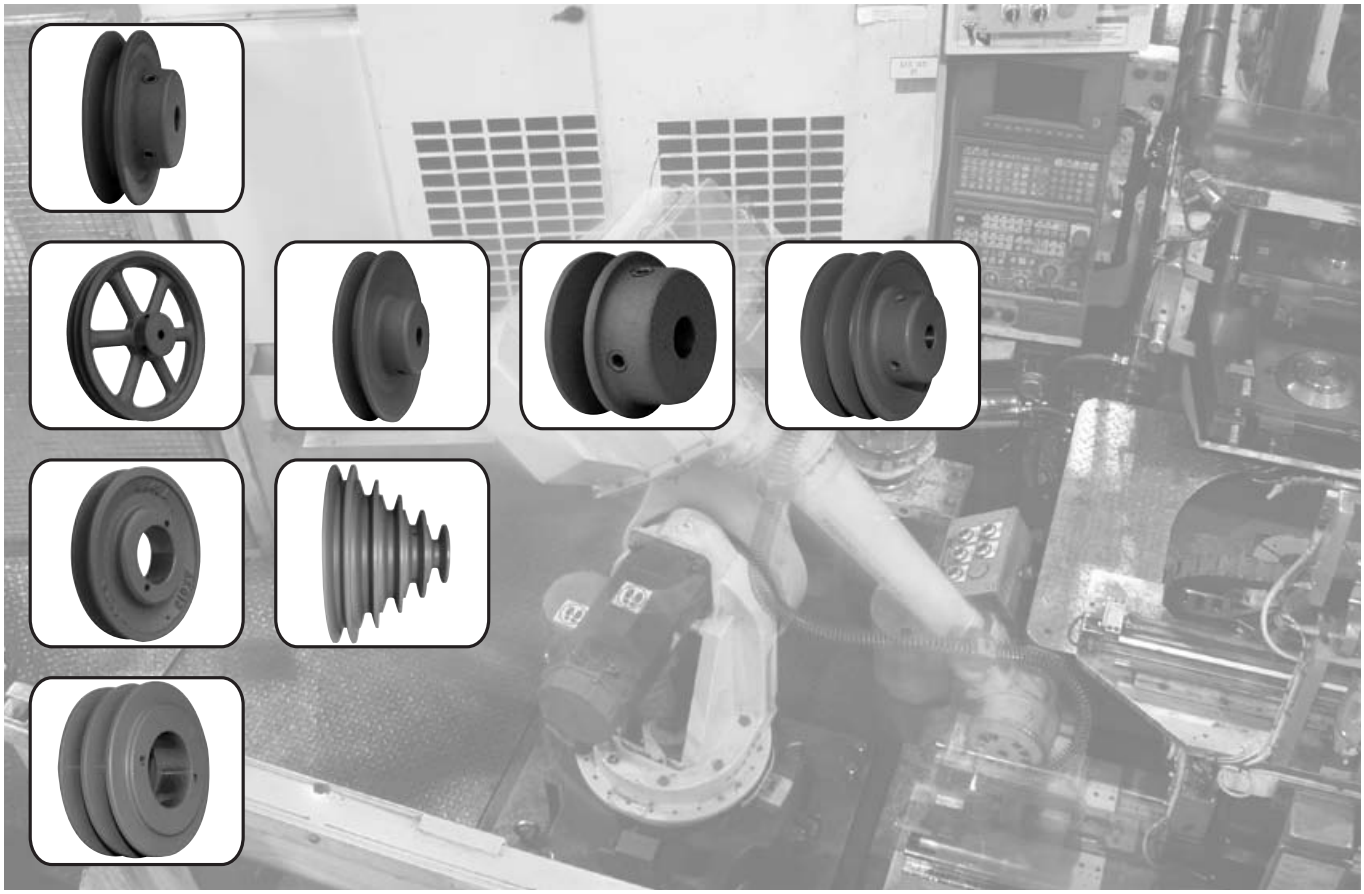

FIXED BORE: MA, 2MA, MB, 2MB

DID YOU KNOW THAT...

- All products have 2 set screws and this definite advantage results in a tighter grip of the mounted product on the shaft for improved performance.
- Bore range 1/2" to 1-7/16"
- 1 & 2 grooves, A-B & 3L-4L-5L belts

IMPORTANT REMINDER

Metric, or additional special bores, are made to order only items. Contact Baldor for price and delivery. OR (alternative) for immediate use, Baldor suggests using an MAL, MBL, 2MAL or 2MBL (see pages 41-44) for a stocked product.

BUSH TYPE: MAL, 2MAL, MBL, 2MBL

DID YOU KNOW THAT...

- Can handle up to 20 HP @ 1750 RPM
- Bore range 1/2" to 1 1/2"
- 1 & 2 grooves, A-B & 3L-4L-5L belts

HOW TO ORDER

EXAMPLE: **2MB65X1-1/8**

2MB65	X1-1/8

2MB65: SHEAVE SIZE

X1-1/8: BORE SIZE (1 1/8")
Inch bore sizes are designated with the whole inch followed by the fraction. For example, a 1.5" diameter bore would be 1-1/2. Metric bore sizes are designated with “MM” after the metric dimension (X 25MM).

MA (A & 3L-4L V-BELTS)

1 GROOVE

D.D. (3L) Belts	D.D. A (4L) Belts	O.D.	Part No	Cross Ref.	List Price $	T	L	Standard Bores	Max. Bore	App. Wt.
-	1.30	1.55	MA15*	-	8.00	1B	1 1/4	1/2 · 5/8	5/8	0.4
-	1.50	1.75	MA18*	AK17	8.32	1B	1 3/8	1/2 · 5/8 · 3/4	3/4	0.4
1.41	1.75	2.00	MA20	AK20	8.32	1B	1 3/8	1/2 · 5/8 · 3/4 · 7/8	7/8	0.7
1.51	1.85	2.10	MA21	AK21	8.68	1B	1 3/8	1/2 · 5/8 · 3/4 · 7/8	7/8	0.7
1.61	1.95	2.20	MA22	AK22	8.68	1B	1 3/8	1/2 · 5/8 · 3/4 · 7/8	7/8	0.8
1.71	2.05	2.30	MA23	AK23	9.24	1B	1 3/8	1/2 · 5/8 · 3/4 · 7/8 · 1	1	0.8
1.76	2.10	2.35	MA24	-	9.42	1B	1 3/8	1/2 · 5/8 · 3/4 · 7/8	7/8	0.8
1.91	2.25	2.50	MA25	AK25	9.60	2B	1 1/4	1/2 · 5/8 · 3/4 · 7/8 · 1 · 1 1/8	1 1/8	0.9
2.01	2.35	2.60	MA26	AK26	9.76	2B	1 1/4	1/2 · 5/8 · 3/4 · 7/8 · 1	1 1/8	0.9
2.11	2.45	2.70	MA27	AK27	10.04	2B	1 1/4	1/2 · 5/8 · 3/4 · 7/8 · 1	1 1/8	0.9
2.21	2.55	2.80	MA28	AK28	11.00	2B	1 1/4	1/2 · 5/8 · 3/4 · 7/8 · 1 · 1 1/8	1 1/8	0.9
2.46	2.80	3.05	MA30	AK30	11.88	2B	1 1/4	1/2 · 5/8 · 3/4 · 7/8 · 1 · 1 1/8	1 1/8	1.2
2.66	3.00	3.25	MA33	AK32	12.24	2B	1 1/4	1/2 · 5/8 · 3/4 · 7/8 · 1 · 1 1/8	1 1/8	1.5
2.86	3.20	3.45	MA35	AK34	13.32	2B	1 1/4	1/2 · 5/8 · 3/4 · 7/8 · 1 · 1 1/8	1 1/8	1.4
3.16	3.50	3.75	MA38	AK39	16.60	2W	1 1/8	1/2 · 5/8 · 3/4 · 7/8 · 15/16 · 1 · 1 1/8	1 1/8	1.5
3.36	3.70	3.95	MA40	AK41	19.16	2W	1 1/8	1/2 · 5/8 · 3/4 · 7/8 · 15/16 · 1 · 1 1/8	1 3/16	2.0
3.66	4.00	4.25	MA43	AK44	19.72	2W	1 1/8	1/2 · 5/8 · 3/4 · 7/8 · 15/16 · 1 · 1 1/8	1 3/16	2.0
3.86	4.20	4.45	MA45	AK46	20.56	2W	1 1/8	1/2 · 5/8 · 3/4 · 7/8 · 15/16 · 1 · 1 1/8	1 3/16	2.0
4.16	4.50	4.75	MA48	AK49	20.76	1A	1 3/8	1/2 · 5/8 · 3/4 · 7/8 · 15/16 · 1 · 1 1/8	1 3/16	2.0
4.36	4.70	4.95	MA50	AK51	21.92	1A	1 3/8	1/2 · 5/8 · 3/4 · 7/8 · 1 · 1 1/8 · 1 3/16	1 3/16	2.0
4.66	5.00	5.25	MA53	AK54	22.32	1A	1 3/8	1/2 · 5/8 · 3/4 · 7/8 · 15/16 · 1 · 1 1/8 · 1 3/16	1 3/16	2.5
4.86	5.20	5.45	MA55	AK56	23.96	1A	1 3/8	1/2 · 5/8 · 3/4 · 7/8 · 15/16 · 1 · 1 1/8 · 1 3/16	1 3/16	2.5
5.16	5.50	5.75	MA58	AK59	25.36	1A	1 3/8	1/2 · 5/8 · 3/4 · 7/8 · 15/16 · 1 · 1 1/8 · 1 3/16	1 3/16	2.5
5.36	5.70	5.95	MA60	AK61	25.56	1A	1 3/8	1/2 · 5/8 · 3/4 · 7/8 · 15/16 · 1 · 1 1/8 · 1 3/16	1 3/16	3.0
5.66	6.00	6.25	MA63	AK64	26.24	1A	1 3/8	1/2 · 5/8 · 3/4 · 7/8 · 15/16 · 1 · 1 1/8 · 1 3/16	1 1/4	3.0
5.86	6.20	6.45	MA65	AK66	27.28	1A	1 3/8	1/2 · 5/8 · 3/4 · 7/8 · 1 · 1 1/8	1 1/4	3.0
6.16	6.50	6.75	MA68	AK69	29.68	1A	1 3/8	1/2 · 5/8 · 3/4 · 7/8 · 1 · 1 1/8 · 1 3/16	1 1/4	3.0
6.36	6.70	6.95	MA70	AK71	30.92	1A	1 3/8	1/2 · 5/8 · 3/4 · 7/8 · 1 · 1 1/8 · 1 3/16 · 1 7/16	1 7/16	3.5
6.66	7.00	7.25	MA73	AK74	31.04	1A	1 3/8	1/2 · 5/8 · 3/4 · 7/8 · 15/16 · 1 · 1 1/8 1 3/16 - 1 1/4 · 1 7/16	1 7/16	3.5
7.16	7.50	7.75	MA78	AK79	35.48	1A	1 3/8	5/8 · 3/4 · 7/8 · 1 · 1 1/8 · 1 7/16	1 7/16	3.5
7.41	7.75	8.00	MA80	-	35.48	1A	1 3/8	1/2 · 5/8 · 3/4 · 7/8 · 1 · 1 1/8 · 1 3/16 · 1 7/16	1 7/16	3.5
7.66	8.00	8.25	MA83	AK84	37.96	1A	1 3/8	1/2 · 5/8 · 3/4 · 7/8 · 15/16 · 1 · 1 1/8 · 1 3/16 · 1 7/16	1 7/16	4.4
8.16	8.50	8.75	MA88	AK89	41.32	1A	1 3/8	5/8 · 3/4 · 7/8 · 1 · 1 1/8 · 1 7/16	1 7/16	4.5
8.41	8.75	9.00	MA90	-	41.32	1A	1 3/8	1/2 · 5/8 · 3/4 · 7/8 · 1 · 1 1/8 · 1 3/16 · 1 7/16	1 7/16	4.5
8.66	9.00	9.25	MA93	AK94	42.20	1A	1 3/8	1/2 · 5/8 · 3/4 · 7/8 · 15/16 · 1 · 1 1/8 1 3/16 · 1 1/4 · 1 7/16	1 7/16	5.4
9.16	9.50	9.75	MA98	AK99	44.20	1A	1 3/8	5/8 · 3/4 · 7/8 · 1 · 1 1/8 · 1 7/16	1 7/16	5.5
9.41	9.75	10.00	MA100	-	44.20	1A	1 3/8	1/2 · 5/8 · 3/4 · 7/8 · 1 · 1 1/8 · 1 3/16 · 1 7/16	1 7/16	5.5
9.66	10.00	10.25	MA103	AK104	45.04	1A	1 3/8	5/8 · 3/4 · 7/8 · 1 · 1 1/8 · 1 3/16 · 1 1/4 · 1 3/8 · 1 7/16	1 7/16	6.0
10.16	10.50	10.75	MA108	AK109	48.28	1A	1 3/8	3/4 · 7/8 · 1 · 1 1/8 ·1 3/8 · 1 7/16	1 7/16	6.0
10.41	10.75	11.00	MA110	-	48.28	1A	1 3/8	1/2 · 5/8 · 3/4 · 7/8 · 1 · 1 1/8 · 1 7/16	1 5/8	6.5
10.66	11.00	11.25	MA113	AK114	50.72	1A	1 3/8	1/2 · 5/8 · 3/4 · 7/8 · 1 · 1 1/8 · 1 3/16 · 1 7/16	1 7/16	6.5
11.41	11.75	12.00	MA120	-	56.60	1A	1 3/8	1/2 · 5/8 · 3/4 · 7/8 · 1 · 1 1/8 · 1 3/16 · 1 7/16	1 7/16	7.5
11.66	12.00	12.25	MA123	AK124	56.60	1A	1 3/8	5/8 · 3/4 · 7/8 · 1 · 1 1/8 · 1 3/16 · 1 1/4 · 1 7/16	1 7/16	7.0
12.66	13.00	13.25	MA133	AK134	67.96	1A	1 3/8	5/8 · 3/4 · 7/8 · 1 · 1 1/8 · 1 3/16 · 1 3/8 · 1 7/16	1 3/4	8.5
13.66	14.00	14.25	MA143	AK144	75.40	1A	1 3/8	5/8 · 3/4 · 7/8 · 1 · 1 1/8 · 1 3/16 · 1 7/16	1 3/4	9.0
14.66	15.00	15.25	MA153	AK154	85.00	1A	1 3/8	5/8 · 3/4 · 7/8 · 1 · 1 1/8 · 1 3/16 · 1 3/8 ·1 7/16	1 3/4	9.0
17.66	18.00	18.25	MA183	AK184	107.56	1A	1 3/8	5/8 · 3/4 · 7/8 · 1 · 1 1/8 · 1 3/16 · 1 7/16	1 7/8	14.0

P.D. for "A" (4L) Belts = O.D
P.D. for "3L" Belts = D.D.+0.25 = O.D.-0.34
*DO NOT use 3L belts with MA15 and MA18 sheaves

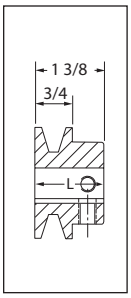

TYPE 1

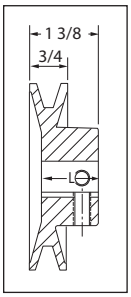

TYPE 2

2MA (A V-BELTS)

2 GROOVES

D.D. A Belts	O.D.	Part No	Cross Reference	List Price $	T	L	Standard Bores	Max. Bore	App. Wt.
1.75	2.00	2MA20	2AK20	20.64	3B	2 1/16	1/2 · 5/8 · 3/4	3/4	1.0
1.90	2.15	2MA22	2AK21	20.64	3B	2 1/16	1/2 · 5/8 · 3/4	7/8	1.0
2.00	2.25	2MA23	2AK22	22.72	3B	2 1/16	1/2 · 5/8 · 3/4 · 7/8 · 1	1	1.0
2.10	2.35	2MA24	2AK23	22.72	4B	1 7/8	1/2 · 5/8 · 3/4 · 7/8 · 1	1 1/8	1.0
2.30	2.55	2MA25	2AK25	22.88	4B	1 11/16	1/2 · 5/8 · 3/4 · 7/8 · 1 · 1 1/8	1 1/8	1.5
2.40	2.65	2MA27	2AK26	25.12	4B	1 7/8	1/2 · 5/8 · 3/4 · 7/8 · 1 · 1 1/8	1 1/8	1.5
2.50	2.75	2MA28	2AK27	27.68	4B	1 11/16	1/2 · 5/8 · 3/4 · 7/8 · 1 · 1 1/8	1 1/8	1.5
2.60	2.85	2MA29	2AK28	27.68	4B	1 11/16	1/2 · 5/8 · 3/4 · 7/8 · 1 · 1 1/8	1 1/8	1.5
2.80	3.05	2MA30	2AK30	30.72	4B	1 11/16	1/2 · 5/8 · 3/4 · 7/8 · 1 · 1 1/8	1 1/8	2.0
3.00	3.25	2MA33	2AK32	34.56	4B	1 5/8	1/2 · 5/8 · 3/4 · 7/8 · 1 · 1 1/8	1 1/8	2.0
3.20	3.45	2MA35	2AK34	35.68	4B	1 5/8	1/2 · 5/8 · 3/4 · 7/8 · 1 · 1 1/8	1 1/8	2.5
3.50	3.75	2MA38	2AK39	36.32	4B	1 5/8	1/2 · 5/8 · 3/4 · 7/8 · 1 · 1 1/8	1 3/16	3.0
3.70	3.95	2MA40	2AK41	40.36	4W	1 9/16	1/2 · 5/8 · 3/4 · 7/8 · 1 · 1 1/8	1 3/16	3.0
4.00	4.25	2MA43	2AK44	41.60	4W	1 9/16	1/2 · 5/8 · 3/4 · 7/8 · 1 · 1 1/8	1 3/16	3.0
4.20	4.45	2MA45	2AK46	43.32	4W	1 11/16	1/2 · 5/8 · 3/4 · 7/8 · 1 · 1 1/8	1 3/16	4.0
4.50	4.75	2MA48	2AK49	44.40	4W	1 9/16	1/2 · 5/8 · 3/4 · 7/8 · 1 · 1 1/8 · 1 3/8	1 3/8	3.5
4.70	4.95	2MA50	2AK51	45.44	4W	1 9/16	1/2 · 5/8 · 3/4 · 7/8 · 1 · 1 1/8	1 3/16	4.0
5.00	5.25	2MA53	2AK54	45.92	4W	1 9/16	5/8 · 3/4 · 7/8 · 1 · 1 1/8 · 1 3/8	1 3/8	4.0
5.20	5.45	2MA55	2AK56	46.72	4W	1 9/16	5/8 · 3/4 · 7/8 · 1 · 1 1/8 · 1 3/8	1 3/8	5.0
5.50	5.75	2MA58	2AK59	50.52	4W	1 9/16	1/2 · 5/8 · 3/4 · 7/8 · 1 · 1 1/8 · 1 3/16 · 1 3/8	1 3/8	5.0
5.70	5.95	2MA60	2AK61	52.08	4W	1 11/16	1/2 · 5/8 · 3/4 · 7/8 · 1 · 1 1/8 · 1 3/8	1 3/8	6.0
6.00	6.25	2MA63	2AK64	54.48	4A	1 9/16	5/8 · 3/4 · 7/8 · 1 · 1 1/8 · 1 3/16 · 1 3/8 · 1 7/16	1 11/16	5.5
6.75	7.00	2MA70	·	60.96	4A	1 9/16	1/2 · 5/8 · 3/4 · 7/8 · 1 · 1 1/8 · 1 7/16	1 11/16	6.0
7.00	7.25	2MA73	2AK74	61.96	4A	1 9/16	3/4 · 7/8 · 1 · 1 1/8 · 1 3/16 · 1 3/8 · 1 7/16	1 11/16	6.0
7.75	8.00	2MA80	·	66.88	4A	1 9/16	1/2 · 5/8 · 3/4 · 7/8 · 1 · 1 1/8 · 1 7/16	1 11/16	7.0
8.00	8.25	2MA83	2AK84	67.88	4A	1 9/16	3/4 · 7/8 · 15/16 · 1 · 1 1/8 · 1 3/16 · 1 3/8 · 1 7/16	1 7/16	8.0
8.75	9.00	2MA90	·	72.80	4A	1 9/16	5/8 · 3/4 · 7/8 · 1 · 1 1/8 · 1 7/16	1 7/16	8.5
9.00	9.25	2MA93	2AK94	73.80	4A	1 9/16	3/4 · 7/8 · 1 · 1 1/8 · 1 3/16 · 1 3/8 · 1 7/16	1 11/16	9.0
9.75	10.00	2MA100	·	78.72	4A	1 9/16	5/8 · 3/4 · 7/8 · 1 · 1 1/8 · 1 7/16	1 11/16	9.0
10.00	10.25	2MA103	2AK104	79.32	4A	1 9/16	3/4 · 7/8 · 15/16 · 1 · 1 1/8 · 1 3/16 · 1 7/16	1 11/16	10.0
10.75	11.00	2MA110	·	85.08	4A	1 9/16	3/4 · 7/8 · 1 · 1 1/8 · 1 7/16	1 11/16	10.0
11.00	11.25	2MA113	2AK114	86.08	4A	1 9/16	3/4 · 7/8 · 1 · 1 1/8 · 1 3/16 · 1 3/8 · 1 7/16	1 11/16	11.0
11.75	12.00	2MA120	·	94.28	4A	1 9/16	5/8 · 3/4 · 7/8 · 1 · 1 1/8 · 1 7/16	1 11/16	11.0
12.00	12.25	2MA123	2AK124	94.28	4A	1 19/32	3/4 · 7/8 · 1 · 1 1/8 · 1 3/16 · 1 7/16	1 11/16	12.0
13.00	13.25	2MA133	2AK134	111.04	4A	1 19/32	5/8 · 7/8 · 1 · 1 1/8 · 1 3/16 · 1 7/16	1 11/16	14.0
14.00	14.25	2MA143	2AK144	117.24	4A	1 9/16	5/8 · 3/4 · 7/8 · 1 · 1 1/8 · 1 3/16 · 1 7/16	1 11/16	15.0
15.00	15.25	2MA153	2AK154	135.28	4A	1 9/16	5/8 · 3/4 · 7/8 · 1 · 1 1/8 · 1 3/16 · 1 7/16	1 15/16	17.0
18.00	18.25	2MA183	2AK184	170.48	4A	1 17/32	5/8 · 7/8 · 1 · 1 1/8 · 1 3/16 · 1 7/16	1 7/16	19.0

P.D. for "A" Belts = O.D.

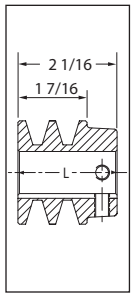

TYPE 3

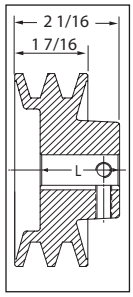

TYPE 4

Bore Range	Keyseat
1/2"	None
5/8" - 7/8"	3/16" X 3/32"
15/16" - 1 1/4"	1/4" X 1/8"
1 5/16" - 1 3/8"	5/16" X 5/32"
1 7/16" - 1 3/4"	3/8" X 3/16"

SHEAVES

SHEAVES

MB (A, B, 4L & 5L V-BELTS)

1 GROOVE

D.D. A (4L) Belts	D.D. B (5L) Belts	O.D.	Part No	Cross Reference	List Price $	T	L	Standard Bores	Max. Bore	App. Wt.
*1.25	1.65	2.00	MB20	-	11.25	5B	1 1/2	1/2* · 5/8* · 3/4*	3/4	0.5
*1.50	1.90	2.25	MB23	-	11.64	6B	1 11/35	1/2 · 5/8 · 3/4 · 7/8 · 1*	1	1.0
1.65	2.05	2.40	MB24	BK24	11.64	6B	1 1/2	1/2 · 5/8 · 3/4 · 7/8	1	1.0
*1.75	2.15	2.50	MB25	BK25	12.00	5B	1 1/2	1/2 · 5/8 · 3/4 · 7/8 · 1* · 1 1/8*	1 1/8	1.0
1.85	2.25	2.60	MB26	BK26	12.68	5B	1 1/2	1/2 · 5/8 · 3/4 · 7/8 · 1	1 1/8	1.0
1.95	2.35	2.70	MB28	BK27	13.20	6B	1 3/8	1/2 · 5/8 · 3/4 · 7/8 · 1 · 1 1/8	1 1/8	1.0
2.20	2.60	2.95	MB30	BK28	13.20	6B	1 3/8	1/2 · 5/8 · 3/4 · 7/8 · 1 · 1 1/8	1 1/8	1.0
2.40	2.80	3.15	MB31	BK30	13.56	6B	1 3/8	1/2 · 5/8 · 3/4 · 7/8 · 1 · 1 1/8	1 1/8	1.0
2.50	2.90	3.25	MB33	-	14.72	6B	1 3/8	1/2 · 5/8 · 3/4 · 7/8 · 1 · 1 1/8	1 1/8	1.0
2.60	3.00	3.35	MB34	BK32	14.72	6B	1 3/8	1/2 · 5/8 · 3/4 · 7/8 · 1 · 1 1/8	1 1/8	1.0
2.80	3.20	3.55	MB35	BK34	18.08	6B	1 3/8	1/2 · 5/8 · 3/4 · 7/8 · 1 · 1 1/8	1 1/8	1.5
3.00	3.40	3.75	MB38	BK36	19.72	6B	1 1/4	1/2 · 5/8 · 3/4 · 7/8 · 1 · 1 1/8	1 1/8	1.5
3.20	3.60	3.95	MB40	BK40	20.56	6B	1 1/4	1/2 · 5/8 · 3/4 · 7/8 · 1 · 1 1/8	1 3/16	2.0
3.50	3.90	4.25	MB43	BK45	21.04	6W	1 1/4	1/2 · 5/8 · 3/4 · 7/8 · 1 · 1 1/8	1 3/16	2.0
3.70	4.10	4.45	MB45	BK47	22.72	6W	1 1/4	1/2 · 5/8 · 3/4 · 7/8 · 1 · 1 1/8	1 3/16	2.0
4.00	4.40	4.75	MB48	BK50	23.04	5W	1 1/2	1/2 · 5/8 · 3/4 · 7/8 · 15/16 · 1 · 1 1/8	1 1/4	2.5
4.20	4.60	4.95	MB50	BK52	23.12	5W	1 1/2	1/2 · 5/8 · 3/4 · 7/8 · 1 · 1 1/8 · 1 3/16	1 1/4	2.5
4.50	4.90	5.25	MB53	BK55	24.48	6W	1 5/16	1/2 · 5/8 · 3/4 · 7/8 · 1 · 1 1/8 · 1 3/16	1 3/16	3.0
4.70	5.10	5.45	MB55	BK57	25.56	5A	1 1/2	1/2 · 5/8 · 3/4 · 7/8 · 15/16 · 1 · 1 1/8 · 1 3/16	1 1/4	2.5
5.00	5.40	5.75	MB58	BK60	26.24	5A	1 1/2	1/2 · 5/8 · 3/4 · 7/8 · 1 · 1 1/8 · 1 3/16	1 3/16	2.5
5.20	5.60	5.95	MB60	BK62	26.44	5A	1 1/2	1/2 · 5/8 · 3/4 · 7/8 · 15/16 · 1 · 1 1/8	1 1/2	2.5
5.50	5.90	6.25	MB63	BK65	29.64	5A	1 1/2	1/2 · 5/8 · 3/4 · 7/8 · 1 · 1 1/8 · 1 3/16	1 5/16	3.0
5.70	6.10	6.45	MB65	BK67	30.76	5A	1 1/2	5/8 · 3/4 · 7/8 · 1 · 1 1/8	1 1/4	3.0
6.00	6.40	6.75	MB68	BK70	34.24	5A	1 1/2	5/8 · 3/4 · 7/8 · 15/16 · 1 · 1 1/8 · 1 3/16 · 1 7/16	1 7/16	4.0
6.20	6.60	6.95	MB70	BK72	36.36	5A	1 1/2	1/2 · 5/8 · 3/4 · 7/8 · 1 · 1 1/8	1 1/4	3.5
6.50	6.90	7.25	MB73	BK75	37.08	5A	1 1/2	1/2 · 3/4 · 7/8 · 1 · 1 1/8 · 1 3/16 · 1 3/8	1 3/8	3.5
6.70	7.10	7.45	MB75	BK77	37.40	5A	1 1/2	5/8 · 3/4 · 1 · 1 1/8 · 1 3/8	1 1/2	4.0
7.00	7.40	7.75	MB78	BK80	37.96	5A	1 1/2	1/2 · 5/8 · 3/4 · 7/8 · 1 · 1 1/8 · 1 3/16 · 1 1/4 · 1 3/8 · 1 7/16	1 7/16	4.0
7.25	7.65	8.00	MB80	-	40.26	5A	1 1/2	1/2 · 5/8 · 3/4 · 7/8 · 1 · 1 1/8 · 1 3/16 · 1 7/16	1 7/16	4.0
7.50	7.90	8.25	MB83	BK85	42.76	5A	1 1/2	1/2 · 5/8 · 3/4 · 7/8 · 1 · 1 1/8 · 1 3/8 · 1 7/16	1 7/16	4.5
8.00	8.40	8.75	MB88	BK90	44.00	5A	1 1/2	1/2 · 5/8 · 3/4 · 7/8 · 15/16 · 1 · 1 1/8 · 1 3/8 · 1 3/16 · 1 7/16	1 7/16	5.0
8.25	8.65	9.00	MB90	-	44.88	5A	1 1/2	1/2 · 5/8 · 3/4 · 7/8 · 1 · 1 1/8 · 1 7/16	1 7/16	5.0
8.50	8.90	9.25	MB93	BK95	47.00	5A	1 1/2	1/2 · 3/4 · 7/8 · 1 · 1 1/8 · 1 3/8 · 1 7/16	1 7/16	5.5
9.00	9.40	9.75	MB98	BK100	48.60	5A	1 1/2	1/2 · 3/4 · 7/8 · 15/16 · 1 · 1 1/8 · 1 3/16 · 1 1/4 · 1 3/8· 1 7/16	1 7/16	6.0
9.25	9.65	10.00	MB100	-	48.60	5A	1 1/2	1/2 · 5/8 · 3/4 · 7/8 · 1 · 1 1/8 · 1 3/16 · 1 7/16	1 7/16	6.0
9.50	9.90	10.25	MB103	BK105	53.20	5A	1 1/2	1/2 · 7/8 · 1 · 1 1/8 · 1 3/8 · 1 7/16	1 5/8	6.5
10.00	10.40	10.75	MB108	BK110	55.88	5A	1 1/2	1/2 · 5/8 · 3/4 · 7/8 · 1 · 1 1/8 · 1 3/8 · 1 7/16	1 7/16	7.0
10.25	10.65	11.00	MB110	-	55.88	5A	1 1/2	5/8 · 3/4 · 7/8 · 1 · 1 1/8 · 1 7/16	1 5/8	7.0
10.50	10.90	11.25	MB113	BK115	57.28	5A	1 1/2	1/2 · 3/4 · 7/8 · 1 · 1 1/8 · 1 3/8 · 1 7/16	1 5/8	8.0
11.00	11.40	11.75	MB118	BK120	59.68	5A	1 1/2	5/8 · 3/4 · 7/8 · 1 · 1 1/8 · 1 3/16 · 1 3/8 · 1 7/16	1 5/8	8.0
11.25	11.65	12.00	MB120	-	57.68	5A	1 1/2	1/2 · 5/8 · 3/4 · 7/8 · 1 · 1 1/8 · 1 3/16 · 1 7/16	1 5/8	8.0
12.00	12.40	12.75	MB128	BK130	66.72	5A	1 1/2	1/2 · 5/8 · 3/4 · 7/8 · 1 · 1 1/8 · 1 3/16 · 1 7/16	1 5/8	9.0
13.00	13.40	13.75	MB138	BK140	80.12	5A	1 1/2	5/8 · 3/4 · 7/8 · 1 · 1 1/8 · 1 3/16 · 1 7/16	1 5/8	10.0
15.00	15.40	15.75	MB158	BK160	104.20	5A	1 1/2	1 · 1 1/8 · 1 3/16 · 1 1/4 · 1 7/16 · 1 3/16 · 1 7/16	1 5/8	12.0
18.00	18.40	18.75	MB188	BK190	120.00	5A	1 1/2	1/2 · 5/8 · 3/4 · 7/8 · 1 · 1 1/8 · 1 3/16 · 1 1/4 · 1 7/16	1 5/8	14.0

P.D. for "A" (4L) Belts = Datum Dia. + 0.35" = O.D. - 0.40" P.D. for "B" (5L) Belts = O.D.
*DO NOT use "A" or "4L" belts with these specific bores

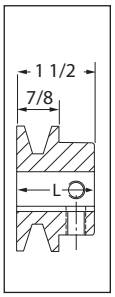

TYPE 5

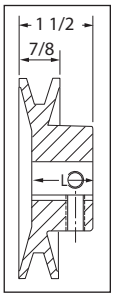

TYPE 6

2MB (A & B V-BELTS)

2 GROOVES

D.D. A Belts	D.D. B Belts	O.D.	Part No	Cross Reference	List Price $	T	L	Standard Bores	Max. Bore	App. Wt.
*1.35	1.75	2.00	2MB20	-	25.42	7B	2 1/8	*1/2 · *5/8 · *3/4 · *7/8	7/8	1.0
*1.60	2.00	2.25	2MB23	-	27.22	8B	2 5/16	1/2 · 5/8 · 3/4 · *7/8	7/8	1.0
*1.90	2.30	2.50	2MB25	2BK25	29.12	7B	2 5/16	1/2 · 5/8 · 3/4 · 7/8 · *1 · *1 1/8	1 1/8	1.5
2.10	2.50	2.70	2MB28	2BK27	30.08	8B	1 15/16	1/2 · 5/8 · 3/4 · 7/8 · 1 · 1 1/8	1 1/8	1.5
2.20	2.60	2.95	2MB30	2BK28	32.36	8B	1 15/16	1/2 · 5/8 · 3/4 · 7/8 · 1 · 1 1/8	1 1/8	2.0
2.40	2.80	3.15	2MB32	2BK30	34.44	8B	1 7/8	1/2 · 5/8 · 3/4 · 7/8 · 1 · 1 1/8	1 1/8	2.0
2.50	2.90	3.25	2MB33	-	36.00	8B	1 7/8	1/2 · 5/8 · 3/4 · 7/8 · 1 · 1 1/8	1 1/8	2.0
2.60	3.00	3.35	2MB34	2BK32	36.00	8B	1 15/16	1/2 · 5/8 · 3/4 · 7/8 · 1 · 1 1/8	1 1/8	3.0
2.80	3.20	3.55	2MB35	2BK34	37.56	8B	1 7/8	1/2 · 5/8 · 3/4 · 7/8 · 1 · 1 1/8	1 1/8	2.5
3.00	3.40	3.75	2MB38	2BK36	38.60	8B	1 7/8	1/2 · 3/4 · 7/8 · 1 · 1 1/8 · 1 3/8	1 3/8	3.0
3.20	3.60	3.95	2MB40	2BK40	40.36	8B	1 11/16	1/2 · 5/8 · 3/4 · 7/8 · 1 · 1 1/8	1 3/16	3.0
3.50	3.90	4.25	2MB43	2BK45	43.48	8W	1 13/16	1/2 · 1 · 1 1/8	1 1/4	4.0
3.70	4.10	4.45	2MB45	2BK47	43.48	8W	1 13/16	1/2 · 5/8 · 3/4 · 7/8 · 1 · 1 1/8	1 1/4	4.0
4.00	4.40	4.75	2MB48	2BK50	46.64	8W	1 13/16	1/2 · 5/8 · 3/4 · 7/8 · 1 · 1 1/8	1 1/4	4.0
4.20	4.60	4.95	2MB50	2BK52	47.88	8W	1 11/16	1/2 · 5/8 · 3/4 · 7/8 · 1 · 1 1/8	1 1/4	4.5
4.50	4.90	5.25	2MB53	2BK55	50.36	8W	1 13/16	1/2 · 5/8 · 3/4 · 7/8 · 1 · 1 1/8 · 1 3/8	1 3/8	5.0
4.70	5.10	5.45	2MB55	2BK57	51.88	8W	1 13/16	1/2 · 5/8 · 3/4 · 7/8 · 1 · 1 1/8 · 1 3/8	1 3/8	5.0
5.00	5.40	5.75	2MB58	2BK60	54.12	8W	1 13/16	1/2 · 3/4 · 7/8 · 1 · 1 1/8 · 1 3/8	1 3/8	5.0
5.20	5.60	5.95	2MB60	2BK62	55.16	8W	1 13/16	5/8 · 3/4 · 7/8 · 1 · 1 1/8 · 1 3/8	1 3/8	6.0
5.50	5.90	6.25	2MB63	2BK65	58.56	8A	1 13/16	1/2 · 1 · 1 1/8 · 1 3/8	1 11/16	6.0
5.70	6.10	6.45	2MB65	2BK67	61.88	8A	1 11/16	1/2 · 5/8 · 3/4 · 7/8 · 1 · 1 1/8 · 1 3/8	1 11/16	6.0
6.00	6.40	6.75	2MB68	2BK70	68.68	8A	1 13/16	1/2 · 5/8 · 3/4 · 1 · 1 1/8 · 1 3/16 · 1 3/8 · 1 7/16	1 11/16	6.0
6.25	6.65	7.00	2MB70	-	68.68	8A	1 13/16	1/2 · 5/8 · 3/4 · 7/8 · 1 · 1 1/8 · 1 7/16	1 11/16	6.0
7.00	7.40	7.75	2MB78	2BK80	72.92	8A	1 13/16	1/2 · 5/8 · 3/4 · 7/8 · 1 · 1 1/8 · 1 3/16 · 1 3/8 · 1 7/16	1 11/16	7.0
7.25	7.65	8.00	2MB80	-	72.92	8A	1 13/16	1/2 · 5/8 · 3/4 · 7/8 · 1 · 1 1/8 · 1 7/16	1 11/16	8.0
8.00	8.40	8.75	2MB88	2BK90	75.40	8A	1 13/16	3/4 · 1 · 1 1/8 · 1 3/16 · 1 3/8 · 1 7/16	1 11/16	8.0
8.25	8.65	9.00	2MB90	-	75.40	8A	1 11/16	5/8 · 3/4 · 7/8 · 1 · 1 1/8 · 1 7/16	1 11/16	9.0
9.00	9.40	9.75	2MB98	2BK100	88.68	8A	1 13/16	3/4 · 1 · 1 1/8 · 1 3/16 · 1 3/8 · 1 7/16	1 11/16	10.0
9.25	9.65	10.00	2MB100	-	88.68	8A	1 13/16	5/8 · 3/4 · 7/8 · 1 · 1 1/8 · 1 7/16	1 11/16	10.0
10.00	10.40	10.75	2MB108	2BK110	94.20	8A	1 13/16	1/2 · 5/8 · 3/4 · 7/8 · 1 · 1 1/8 · 1 3/16 · 1 7/16	1 11/16	13.0
10.25	10.65	11.00	2MB110	-	94.20	8A	1 13/16	5/8 · 3/4 · 7/8 · 1 · 1 1/8 · 1 7/16	1 11/16	13.0
11.00	11.40	11.75	2MB118	2BK120	102.00	8A	1 13/16	1 · 1 3/16 · 1 7/16	1 11/16	10.0
11.25	11.65	12.00	2MB120	-	102.00	8A	1 11/16	5/8 · 3/4 · 7/8 · 1 · 1 1/8 · 1 1/4 · 1 7/16	1 11/16	15.0
12.00	12.40	12.75	2MB128	2BK130	114.60	8A	1 13/16	1/2 · 1 · 1 3/16 · 1 7/16	1 7/8	15.0
13.00	13.40	13.75	2MB138	2BK140	120.28	8A	1 13/16	1/2 · 5/8 · 3/4 · 7/8 · 1 · 1 1/8 · 1 3/16 · 1 7/16	1 7/8	17.0
15.00	15.40	15.75	2MB158	2BK160	143.24	8A	1 13/16	1/2 · 1 · 1 3/16 · 1 3/8 · 1 7/16	1 7/8	18.0
18.00	18.40	18.75	2MB188	2BK190	183.76	8A	1 13/16	1 1/8 · 1 3/16 · 1 7/16	1 7/8	26.0

P.D. for "A" Belts = Datum Dia. + 0.35" = O.D. - 0.40" P.D. for "B" Belts = O.D.
*DO NOT use "A" belts with these specific bores

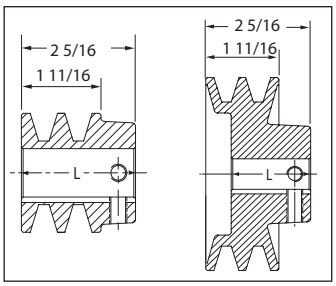

TYPE 7 TYPE 8

Bore Range	Keyseat
1/2"	None
5/8" - 7/8"	3/16" X 3/32"
15/16" - 1 1/4"	1/4" X 1/8"
1 5/16" - 1 3/8"	5/16" X 5/32"
1 7/16" - 1 3/4"	3/8" X 3/16"

SHEAVES

MAL (A & 3L-4L V-BELTS)

This entire product series uses the "L" Bushing

1 GROOVE

D.D (3L) Belts	D.D A(4L) Belts	O.D.	Part No	Cross Refer.	List Price $	Type	Dimensions* E	F	L	M	Wt (lbs)
2.46	2.8	3.05	MAL30	AK30H	19.06	1B	3/8	3/4	1 11/32	31/32	1.15
2.66	3.0	3.25	MAL32	AK32H	19.36	1B	3/8	3/4	1 11/32	31/32	1.30
2.86	3.2	3.45	MAL34	AK34H	19.64	1B	3/32	3/4	1 11/32	11/16	1.20
3.16	3.5	3.75	MAL37	AK39H	20.78	1B	3/32	3/4	1 11/32	11/16	1.50
3.36	3.7	3.95	MAL39	AK41H	21.06	1B	3/32	3/4	1 11/32	11/16	1.75
3.66	4.0	4.25	MAL42	AK44H	21.34	1B	3/32	3/4	1 11/32	11/16	2.05
3.86	4.2	4.45	MAL44	AK46H	21.62	1B	3/32	3/4	1 11/32	11/16	2.25
4.16	4.5	4.75	MAL47	AK49H	21.92	3W	3/32	3/4	1 11/32	11/16	2.10
4.36	4.7	4.95	MAL49	AK51H	22.20	3W	3/32	3/4	1 11/32	11/16	2.35
4.66	5.0	5.25	MAL52	AK54H	22.48	3W	3/32	3/4	1 11/32	11/16	2.65
4.86	5.2	5.45	MAL54	AK56H	22.80	3W	3/32	3/4	1 11/32	11/16	2.75
5.16	5.5	5.75	MAL57	AK59H	23.24	5A	3/32	3/4	1 11/32	11/16	2.60
5.36	5.7	5.95	MAL59	AK61H	23.72	5A	3/32	3/4	1 11/32	11/16	2.50
5.66	6.0	6.25	MAL62	AK64H	24.32	5A	3/32	3/4	1 11/32	11/16	2.60
5.86	6.2	6.45	MAL64	AK66H	25.08	5A	3/32	3/4	1 11/32	11/16	2.70
6.16	6.5	6.75	MAL67	AK69H	27.48	5A	3/32	3/4	1 11/32	11/16	2.85
6.36	6.7	6.95	MAL69	AK71H	28.96	5A	3/32	3/4	1 11/32	11/16	2.90
6.66	7.0	7.25	MAL72	AK74H	30.36	5A	3/32	3/4	1 11/32	11/16	3.10
7.16	7.5	7.75	MAL77	AK79H	33.08	5A	3/32	3/4	1 11/32	11/16	3.35
7.66	8.0	8.25	MAL82	AK84H	35.20	5A	1/8	3/4	1 11/32	23/32	3.85
8.16	8.5	8.75	MAL87	AK89H	37.92	5A	3/32	3/4	1 11/32	11/16	4.10
8.66	9.0	9.25	MAL92	AK94H	40.96	5A	3/32	3/4	1 11/32	11/16	4.40
9.16	9.5	9.75	MAL97	AK99H	43.52	5A	3/32	3/4	1 11/32	11/16	4.60
9.66	10.0	10.25	MAL102	AK104H	44.12	5A	3/32	3/4	1 11/32	11/16	4.90
10.16	10.5	10.75	MAL107	AK109H	46.36	5A	3/32	3/4	1 11/32	11/16	5.20
10.66	11.0	11.25	MAL112	AK114H	47.84	5A	3/32	3/4	1 11/32	11/32	5.55
11.66	12.0	12.25	MAL122	AK124H	52.28	5A	3/32	3/4	1 11/32	11/16	5.90
12.66	13.0	13.25	MAL132	AK134H	60.28	5A	3/32	3/4	1 11/32	11/16	6.55
13.66	14.0	14.25	MAL142	AK144H	67.72	5A	3/32	3/4	1 11/32	11/16	7.30
14.66	15.0	15.25	MAL152	AK154H	74.52	5A	3/32	3/4	1 11/32	11/16	9.80
17.66	18.0	18.25	MAL182	AK184H	88.00	5A	3/32	3/4	1 11/32	11/16	9.95

P.D. for "A" (4L) Belts = O.D. P.D. for "3L" Belts = D.D.+0.25 = O.D.-0.34 * Dimensions to closest fraction
Legend: "E" and "M" dimensions may vary according to shaft tolerance. With "L" bushing only reverse mounting is possible, see page 9 for installation instructions.

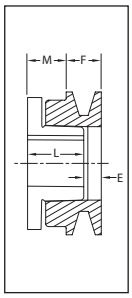

TYPE 1

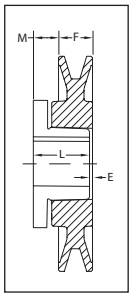

TYPE 3

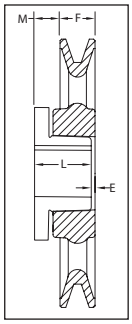

TYPE 5

2MAL (A V-BELTS)

This entire product series uses the "L" Bushing

2 GROOVES

D.D. "A" Belts	O.D.	Part No	Cross Refer.	List Price $	Type	Dimensions*				Wt (lbs)
						E	F	L	M	
2.8	3.05	2MAL30	2AK30H	33.36	2B	1	1 3/8	1 11/32	31/32	1.70
3.0	3.25	2MAL32	2AK32H	37.48	2B	1	1 3/8	1 11/32	31/32	1.90
3.2	3.45	2MAL34	2AK34H	37.76	2B	23/32	1 3/8	1 11/32	11/16	1.90
3.5	3.75	2MAL37	2AK39H	38.56	2B	23/32	1 3/8	1 11/32	11/16	2.15
3.7	3.95	2MAL39	2AK41H	42.68	4B	3/32	1 3/8	1 11/32	1/16	2.30
4.0	4.25	2MAL42	2AK44H	44.16	4B	3/32	1 3/8	1 11/32	1/16	2.75
4.2	4.45	2MAL44	2AK46H	46.24	4W	3/32	1 3/8	1 11/32	1/16	2.85
4.5	4.75	2MAL47	2AK49H	47.12	4W	3/32	1 3/8	1 11/32	1/16	3.50
4.7	4.95	2MAL49	2AK51H	48.44	4W	3/32	1 3/8	1 11/32	1/16	3.70
5.0	5.25	2MAL52	2AK54H	50.52	4W	3/32	1 3/8	1 11/32	1/16	4.05
5.2	5.45	2MAL54	2AK56H	51.24	4W	3/32	1 3/8	1 11/32	1/16	4.20
5.5	5.75	2MAL57	2AK59H	51.68	6A	3/32	1 3/8	1 11/32	1/16	3.90
5.7	5.95	2MAL59	2AK61H	52.88	6A	3/32	1 3/8	1 11/32	1/16	4.05
6.0	6.25	2MAL62	2AK64H	55.76	6A	3/32	1 3/8	1 11/32	1/16	4.50
6.2	6.45	-	-	-	-	-	-	-	-	-
6.5	6.75	-	-	-	-	-	-	-	-	-
6.7	6.95	-	-	-	-	-	-	-	-	-
7.0	7.25	2MAL72	2AK74H	62.36	6A	3/32	1 3/8	1 11/32	1/16	5.70
7.5	7.75	-	-	-	-	-	-	-	-	-
8.0	8.25	2MAL82	2AK84H	69.20	6A	3/32	1 3/8	1 11/32	1/16	6.50
8.5	8.75	-	-	-	-	-	-	-	-	-
9.0	9.25	2MAL92	2AK94H	74.36	6A	3/32	1 3/8	1 11/32	1/16	7.80
9.5	9.75	-	-	-	-	-	-	-	-	-
10.0	10.25	2MAL102	2AK104H	77.92	6A	3/32	1 3/8	1 11/32	1/16	8.80
10.5	10.75	-	-	-	-	-	-	-	-	-
11.0	11.25	2MAL112	2AK114H	86.68	6A	3/32	1 3/8	1 11/32	1/16	9.50
12.0	12.25	2MAL122	2AK124H	91.40	6A	3/32	1 3/8	1 11/32	1/16	10.60
13.0	13.25	2MAL132	2AK134H	96.76	6A	3/32	1 3/8	1 11/32	1/16	11.90
14.0	14.25	2MAL142	2AK144H	102.36	6A	3/32	1 3/8	1 11/32	1/16	12.45
15.0	15.25	2MAL152	2AK154H	114.68	6A	3/32	1 3/8	1 11/32	1/16	14.00
18.0	18.25	2MAL182	2AK184H	151.12	6A	3/32	1 3/8	1 11/32	1/16	17.95

P.D. for "A" Belts = O.D. * Dimensions to closest fraction
Legend: "E" and "M" dimensions may vary according to shaft tolerance. With "L" bushing only reverse mounting is possible, see page 9 for installation instructions.

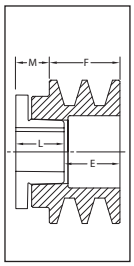

TYPE 2

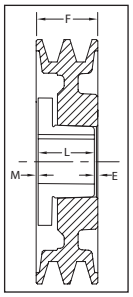

TYPE 4

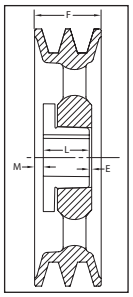

TYPE 6

MBL (A-B & 4L-5L V-BELTS)

This entire product series uses the "L" Bushing

1 GROOVE

D.D A(4L) Belts	D.D B(5L) Belts	O.D.	Part No	Cross Refer.	List Price $	Type	Dimensions* E	Dimensions* F	Dimensions* L	Dimensions* M	Wt (lbs)
2.40	2.80	3.15	MBL31	BK30H	21.68	1B	17/32	29/32	1 11/32	63/64	1.25
2.60	3.00	3.35	MBL33	BK32H	23.06	1B	17/32	29/32	1 11/32	63/64	1.40
2.80	3.20	3.55	MBL35	BK34H	23.10	1B	17/32	29/32	1 11/32	63/64	1.65
3.00	3.40	3.75	MBL37	BK36H	23.28	3B	3/32	29/32	1 11/32	17/32	1.40
3.20	3.60	3.95	MBL39	BK40H	23.34	3B	3/32	29/32	1 11/32	17/32	1.70
3.50	3.90	4.25	MBL42	BK45H	23.84	3B	3/32	29/32	1 11/32	17/32	2.05
3.70	4.10	4.45	MBL44	BK47H	24.36	3B	3/32	29/32	1 11/32	17/32	2.35
4.00	4.40	4.75	MBL47	BK50H	24.92	3W	3/32	29/32	1 11/32	17/32	1.95
4.20	4.60	4.95	MBL49	BK52H	25.44	3W	3/32	29/32	1 11/32	17/32	2.40
4.50	4.90	5.25	MBL52	BK55H	25.96	3W	3/32	29/32	1 11/32	17/32	2.35
4.70	5.10	5.45	MBL54	BK57H	26.46	3W	3/32	29/32	1 11/32	17/32	2.90
5.00	5.40	5.75	MBL57	BK60H	26.76	5W	3/32	29/32	1 11/32	17/32	2.45
5.20	5.60	5.95	MBL59	BK62H	28.20	5W	3/32	29/32	1 11/32	17/32	2.80
5.50	5.90	6.25	MBL62	BK65H	30.08	5W	3/32	29/32	1 11/32	17/32	2.70
5.70	6.10	6.45	MBL64	BK67H	30.96	5W	3/32	29/32	1 11/32	17/32	2.80
6.00	6.40	6.75	MBL67	BK70H	32.04	5A	3/32	29/32	1 11/32	17/32	3.00
6.20	6.60	6.95	MBL69	BK72H	33.52	5A	3/32	29/32	1 11/32	17/32	3.60
6.50	6.90	7.25	MBL72	BK75H	34.92	5A	3/32	29/32	1 11/32	17/32	3.45
6.70	7.10	7.45	MBL74	BK77H	35.36	5A	3/32	29/32	1 11/32	17/32	3.65
7.00	7.40	7.75	MBL77	BK80H	35.96	5A	3/32	29/32	1 11/32	17/32	3.80
7.50	7.90	8.25	MBL82	BK85H	39.92	5A	3/32	29/32	1 11/32	17/32	4.55
8.00	8.40	8.75	MBL87	BK90H	42.48	5A	3/32	29/32	1 11/32	17/32	5.10
8.50	8.90	9.25	MBL92	BK95H	45.68	5A	3/32	29/32	1 11/32	17/32	5.30
9.00	9.40	9.75	MBL97	BK100H	47.44	5A	3/32	29/32	1 11/32	17/32	5.80
9.50	9.90	10.25	MBL102	BK105H	48.36	5A	3/32	29/32	1 11/32	17/32	5.50
10.00	10.40	10.75	MBL107	BK110H	52.16	5A	3/32	29/32	1 11/32	17/32	5.85
10.50	10.90	11.25	MBL112	BK115H	53.80	5A	3/32	29/32	1 11/32	17/32	7.20
11.00	11.40	11.75	MBL117	BK120H	57.72	5A	3/32	29/32	1 11/32	17/32	6.59
12.00	12.40	12.75	MBL127	BK130H	63.16	5A	3/32	29/32	1 11/32	17/32	7.90
13.00	13.40	13.75	MBL137	BK140H	71.64	5A	3/32	29/32	1 11/32	17/32	10.15
14.00	14.40	14.75	MBL147	BK150H	77.80	5A	3/32	29/32	1 11/32	17/32	13.25
15.00	15.40	15.75	MBL157	BK160H	83.72	5A	3/32	29/32	1 11/32	17/32	16.05
18.00	18.40	18.75	MBL187	BK190H	114.52	5A	3/32	29/32	1 11/32	17/32	12.45

P.D. for "A" (4L) Belts = Datum.Dia. + 0.35" = O.D. - 0.40" P.D. for "B" (5L) Belts = O.D.
* Dimensions to closest fraction
Legend: "E" and "M" dimensions may vary according to shaft tolerance.
With "L" bushing only reverse mounting is possible, see page 9.

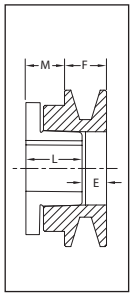

TYPE 1

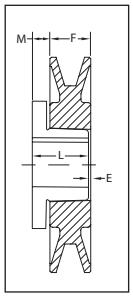

TYPE 3

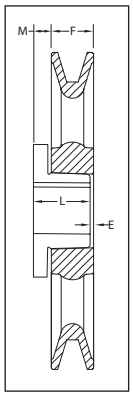

TYPE 5

2MBL (A-B V-BELTS)

This entire product series uses the "L" Bushing

2 GROOVES

D.D "A" Belts	D.D "B" Belts	O.D.	Part No	Cross Refer.	List Price $	Type	Dimensions* E	Dimensions* F	Dimensions* L	Dimensions* M	Wt (lbs)
2.40	2.80	3.15	-	-	-	-	-	-	-	-	-
2.60	3.00	3.35	2MBL33	2BK32H	39.56	2B	1 3/8	1 3/4	1 11/32	31/32	2.35
2.80	3.20	3.55	2MBL35	2BK34H	39.84	2B	1 3/8	1 3/4	1 11/32	31/32	2.55
3.00	3.40	3.75	2MBL37	2BK36H	40.64	2B	1 3/8	1 3/4	1 11/32	31/32	3.00
3.20	3.60	3.95	2MBL39	2BK40H	41.04	2B	15/16	1 3/4	1 11/32	17/32	2.80
3.50	3.90	4.25	2MBL42	2BK45H	42.08	2B	15/16	1 3/4	1 11/32	17/32	3.25
3.70	4.10	4.45	2MBL44	2BK47H	46.36	2B	15/16	1 3/4	1 11/32	17/32	3.35
4.00	4.40	4.75	2MBL47	2BK50H	47.24	4W	3/32	1 3/4	1 11/32	5/16	3.85
4.20	4.60	4.95	2MBL49	2BK52H	48.44	4W	3/32	1 3/4	1 11/32	5/16	4.00
4.50	4.90	5.25	2MBL52	2BK55H	52.44	4W	3/32	1 3/4	1 11/32	5/16	4.40
4.70	5.10	5.45	2MBL54	2BK57H	53.32	4W	3/32	1 3/4	1 11/32	5/16	4.95
5.00	5.40	5.75	2MBL57	2BK60H	54.52	4W	3/32	1 3/4	1 11/32	5/16	5.30
5.20	5.60	5.95	2MBL59	2BK62H	55.24	4W	3/32	1 3/4	1 11/32	5/16	5.80
5.50	5.90	6.25	2MBL62	2BK65H	59.56	6A	1/16	1 3/4	1 11/32	11/32	5.40
5.70	6.10	6.45	2MBL64	2BK67H	60.60	6A	1/16	1 3/4	1 11/32	11/32	5.85
6.00	6.40	6.75	2MBL67	2BK70H	62.24	6A	1/16	1 3/4	1 11/32	11/32	5.55
6.20	6.60	6.95	2MBL69	-	64.60	6A	1/16	1 3/4	1 11/32	11/32	6.65
6.50	6.90	7.25	-	-	-	-	-	-	-	-	-
6.70	7.10	7.45	-	-	-	-	-	-	-	-	-
7.00	7.40	7.75	2MBL77	2BK80H	72.28	6A	1/16	1 3/4	1 11/32	11/32	6.85
7.50	7.90	8.25	-	-	-	-	-	-	-	-	-
8.00	8.40	8.75	2MBL87	2BK90H	73.64	6A	1/16	1 3/4	1 11/32	11/32	9.65
8.50	8.90	9.25	-	-	-	-	-	-	-	-	-
9.00	9.40	9.75	2MBL97	2BK100H	85.48	6A	1/16	1 3/4	1 11/32	11/32	9.20
9.50	9.90	10.25	-	-	-	-	-	-	-	-	-
10.00	10.40	10.75	2MBL107	2BK110H	92.60	6A	1/16	1 3/4	1 11/32	11/32	12.80
10.50	10.90	11.25	-	-	-	-	-	-	-	-	-
11.00	11.40	11.75	2MBL117	2BK120H	105.76	6A	1/16	1 3/4	1 11/32	11/32	14.65
12.00	12.40	12.75	2MBL127	2BK130H	113.64	6A	1/16	1 3/4	1 11/32	11/32	14.15
13.00	13.40	13.75	2MBL137	2BK140H	128.60	6A	1/16	1 3/4	1 11/32	11/32	14.95
15.00	15.40	15.75	2MBL157	2BK160H	134.92	6A	1/16	1 3/4	1 11/32	11/32	18.70
18.00	18.40	18.75	2MBL187	2BK190H	151.40	6A	1/16	1 3/4	1 11/32	11/32	24.20

P.D. for "A" Belts = Datum.Dia. + 0.35" = O.D. - 0.40" P.D. for "B" Belts = O.D.
* Dimensions to closest fraction
Legend: "E" and "M" dimensions may vary according to shaft tolerance.
With "L" bushing only reverse mounting is possible, see page 9.

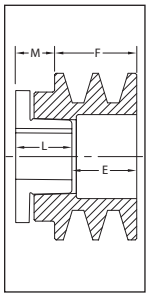

TYPE 2

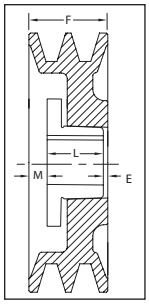

TYPE 4

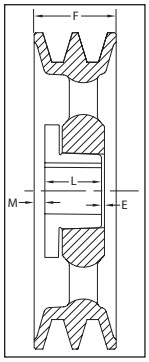

TYPE 6

FRACTIONAL HORSEPOWER SERIES

(F.H.P.): MFAL (FIXED BORE A & 4L V-BELT SERIES)

DID YOU KNOW THAT...

- Stock items include one set screw with standard keyseat

IMPORTANT REMINDER

CAUTION: DO NOT use "A" gripnotch belts ratings with MFAL and MFAM sheaves.

HOW TO ORDER

EXAMPLE: **MFAL104X3/4**

M	FAL	104	X3/4

M:	MASKA LIGHT DUTY FAMILY
FAL:	FRACTIONAL HORSEPOWER SERIE
104:	OUTSIDE DIAMETER (10") (REFER TO THE DIMENSIONS TABLE FOR EXACT VALUE)
X3/4:	BORE SIZE (3/4")

DIMENSIONS

Part No.	List Price $	Diameter		Stock Bores			Dimensions				Wt (lbs)
		Outside	D.D. A (4L)	5/8"	3/4"	1"	F	L	P	C	
MFAL54*	14.88	4.93	4.78	x	x	x	19/32	1 1/16	15/32	-	1.1
MFAL64*	15.56	5.93	5.78	x	x	x	19/32	1 1/16	15/32	-	1.5
MFAL74*	17.76	6.93	6.78	x	x	x	19/32	1 1/16	15/32	-	1.75
MFAL84*	20.24	7.93	7.78	x	x	x	19/32	1 1/16	15/32	-	2.2
MFAL94	25.56	8.93	8.78	-	x	x	19/32	1 1/16	15/32	-	3.0
MFAL104	28.20	9.93	9.78	-	x	x	19/32	1 1/16	15/32	-	2.7
MFAL114	31.20	10.93	10.78	-	x	x	19/32	1 1/16	15/32	-	3.1
MFAL124	37.40	11.93	11.78	-	x	x	19/32	1 1/16	15/32	-	3.5
MFAM144	61.20	14.16	14.00	-	-	x	11/16	1 3/32	13/32	1/32	5.2

*Note: This item is packaged 10 per carton.
Pitch Dia. for "A" (4L) belts = Datum Dia. +.26" = O.D. +.11"

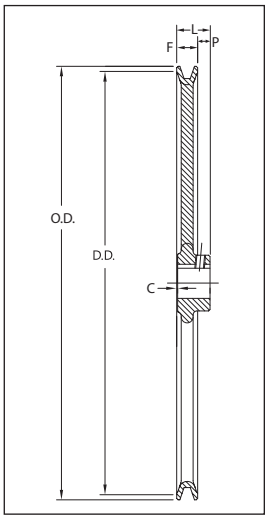

Bore Range	Keyseat
1/2" 5/8" - 7/8" 15/16" - 1 1/4"	None 3/16" X 3/32" 1/4" X 1/8"

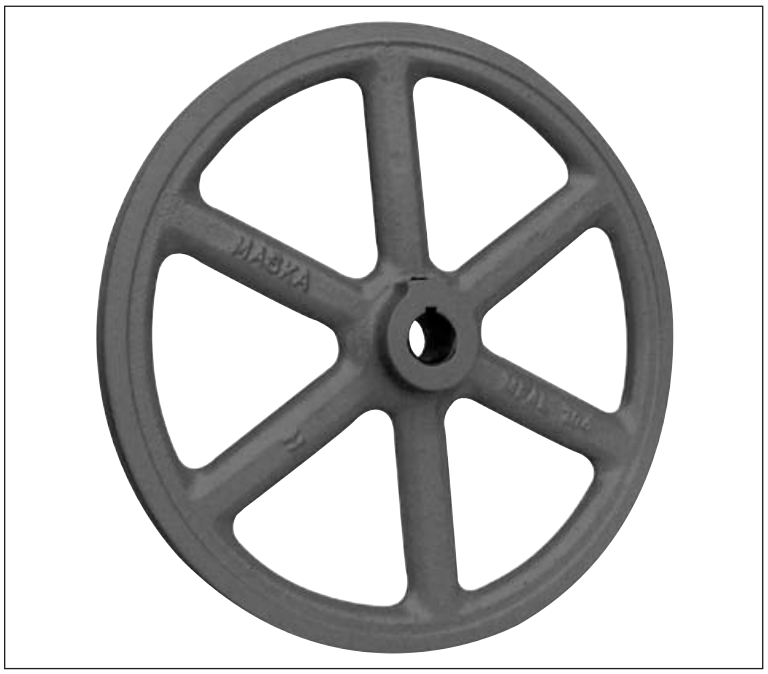

SHEAVES

STEP PULLEYS: MAS

DID YOU KNOW THAT...

- Commonly used with drill presses & wood lathes
- All bores come with 2 set screws
- Designed for A, 4L & 3L V-Belts
- Models of 3 to 5 steps
- From 2"-6" diameter

HOW TO ORDER

EXAMPLE: **MAS62X1/2**

M	AS	62	X1/2

M: MASKA LIGHT DUTY FAMILY

AS: STEP PULLEY SERIE

62: OUTSIDE DIAMETERS

THE FIRST DIGIT REPRESENTS THE LARGEST OUTSIDE DIAMETER (6")

THE SECOND DIGIT REPRESENTS THE SMALLEST OUTSIDE DIAMETER (2")

X1/2: BORE SIZE (1/2")

FIXED BORE, STOCK SIZES FOR 3L-4L (A) V-BELTS

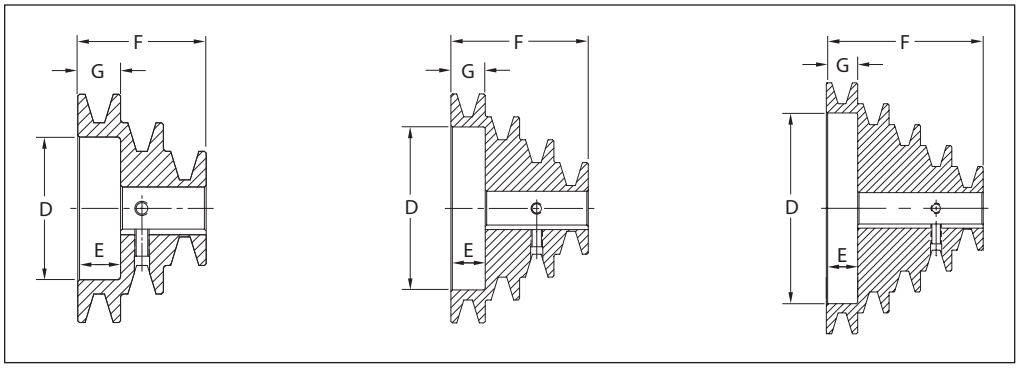

TYPE 1 TYPE 2 TYPE 3

DIMENSIONS

Part No	List Price $	Type	Outside Diameters	Stock Bores	Dimensions (inches)				Wt
					D	G	F	E	
MAS62	91.80	3	6" 5" 4" 3" 2"	1/2-5/8-3/4-7/8	4 9/16	3/4	3 3/4	3/4	8.0
MAS63	78.80	2	6" 5" 4" 3"	1/2-5/8-3/4-7/8-1-1 1/8	4 9/16	3/4	3	3/4	7.5
MAS64	65.30	1	6" 5" 4"	1/2-5/8-3/4-7/8-1-1 1/8	4 9/16	3/4	2 1/4	3/4	6.5
MAS52	67.30	2	5" 4" 3" 2"	1/2-5/8-3/4-7/8	3 9/16	3/4	3	3/4	4.5
MAS53	56.60	1	5" 4" 3"	1/2-5/8-3/4-7/8-1-1 1/8	3 9/16	3/4	2 1/4	3/4	4.2
MAS42	46.10	1	4" 3" 2"	1/2-5/8-3/4-7/8	2 1/2	3/4	2 1/4	3/4	2.3

D.D. for "A"(4L) belts = O.D. - .25"
D.D. for 3L belts = O.D. - .59"

P.D. for "A"(4L) belts = O.D.
P.D. for 3L belts = O.D. - .34"

Bore Range	Keyseat
1/2"	None
5/8" - 7/8"	3/16" X 3/32"
15/16" - 1-1/4"	1/4" X 1/8"

REDUCER BUSHINGS

DID YOU KNOW THAT...

Reducer bushings can be used to urgently accommodate smaller shafts OR when you don't have the required bore on hand.

- Instantly adapt larger bores of various tools (sheaves, gears, sprockets) to smaller diameter shafts
- Keep these inexpensive items on hand for emergency situations to stay up and running
- Make local inventory more flexible at a very low cost
- Split galvanized steel with 3/16" keyway slot
- Sold poly-bagged in quantity of 10, no broken package

HOW TO ORDER

EXAMPLE: **SB1**

SB1

SB1: PRODUCT NUMBER

DIMENSIONS

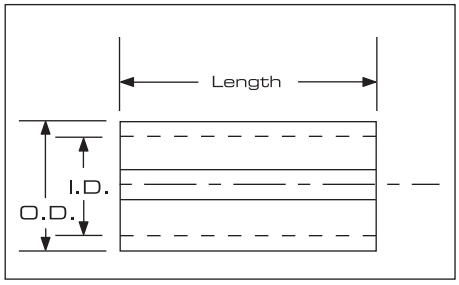

I.D.	O.D.	Part No. (Qty)	List Price Bag $	Length
1/4	5/16	**SB1 (10)**	20.00	1
1/4	3/8	**SB2 (10)**	20.00	1 1/16
5/16	3/8	**SB3 (10)**	20.00	1 1/16
3/8	7/16	**SB4 (10)**	20.00	1 1/16
3/8	1/2	**SB5 (10)**	20.00	1
1/2	5/8	**SB6 (10)**	20.00	1 1/4
1/2	5/8	**SB7 (10)**	20.00	1 1/2
5/8	3/4	**SB8 (10)**	20.00	1 1/4
3/4	1	**SB9 (10)**	30.00	1 1/4
7/8	1	**SB10 (10)**	30.00	1 5/16
(Key)		**K10 (10)**	20.00	1 1/4

ADJUSTABLE PITCH SHEAVES

All adjustable speed sheaves are used primarily in the Air Handling industry. Optimal fan working speed is easily obtained by simply adjusting one of the pulleys.

DID YOU KNOW THAT...

- All our adjustable pitch sheaves are made of durable gray cast iron class 30
- Line covers from fractional light duty (less than 1 HP) to heavy duty (40HP) applications

IMPORTANT REMINDER

- **DO NOT use these gray cast iron sheaves with rim speeds in excess of 6500 feet per minute. Note that the max. RPM indicated on the arm of the sheave is based on the 6500 ft/min. limit, and doesn't take into consideration the need for dynamic balancing (two planes). Please refer to page 30 to verify the validity of dynamic balancing in your application. All operational PT products when used in a drive are potentially dangerous and must be guarded by the user as required by applicable laws, regulations, standards and good safety practice. (Refer to ANSI Standard B15.1)**
- **Irregardless of the equipment used, Baldor recommends NOT reboring adjustable pitch pulleys. The concentricity may be lost.**

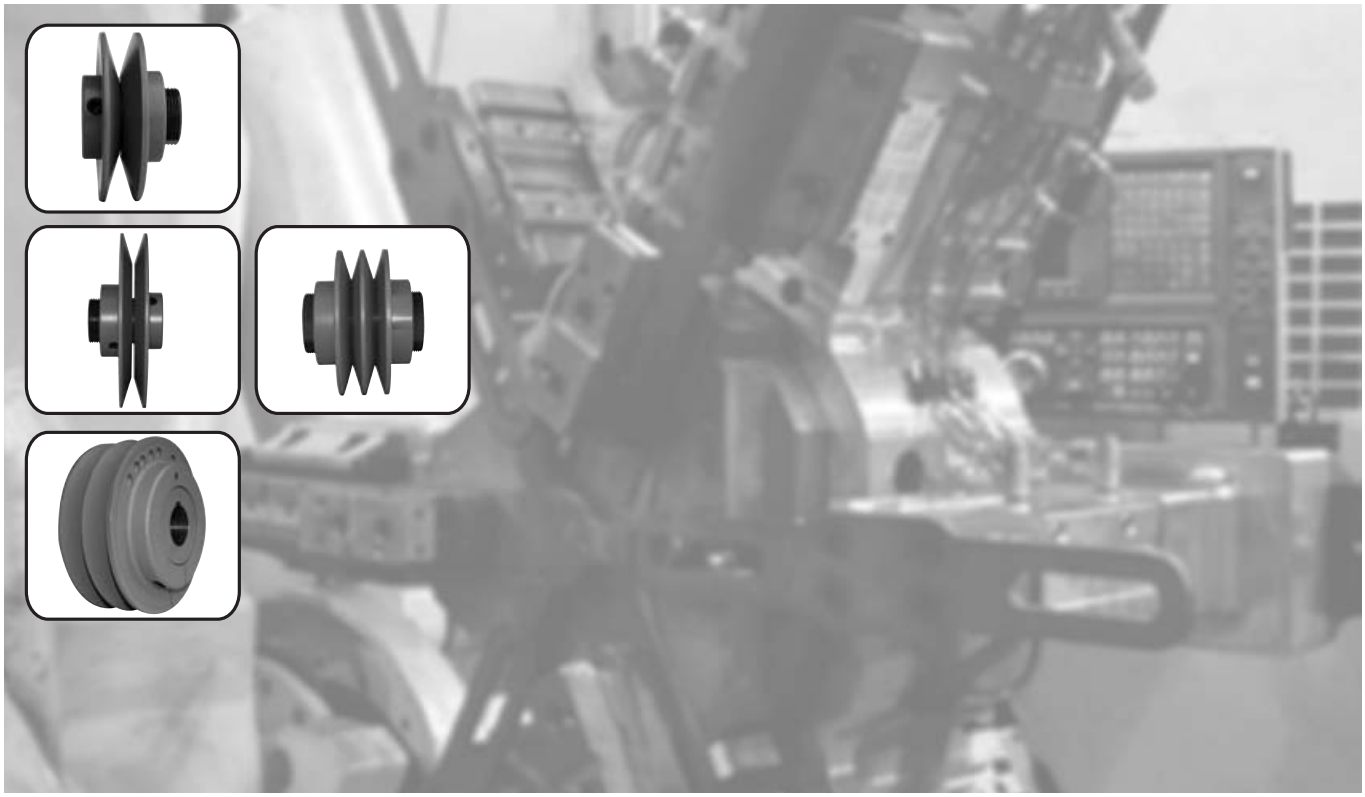

ADJUSTABLE PITCH LIGHT DUTY (HVAC) MVL

DID YOU KNOW THAT...

- Designed for applications up to 5HP
- Bore range1/2" to 7/8"
- Bulk packaged 20 per carton
- Designed to be used with the MFAL Series

IMPORTANT REMINDER

Do NOT use "B" gripnotch belt ratings with MVL sheaves.

HOW TO ORDER

EXAMPLE: **MVL30X5/8**

MVL	30	X7/8

MVL: ADJUSTABLE PITCH SHEAVE SERIES

30: Approximate outside diameter 2.87"

X5/8: BORE SIZE (5/8")
Bore size: Inch bore sizes are designated with the whole inch followed by the fraction. For example, a 1.5" diameter bore would be 1-1/2.

Pulley Adjustment

Modify the sheave pitch diameter by rotating the adjustable flange on the threaded hub of the pulley. Once the required diameter is obtained, tighten the adjusting screw(s) on one of the two flat surfaces.

DIMENSIONS

Part No.	List Price $	O.D.	Dimensions						Stock Bores Marked "X"				WT (Lbs)
			F		G		L	K					
			Max.	Min.	Max.	Min.			1/2	5/8	3/4	7/8	
MVL25	11.70	2.50	27/32	19/32	5/8	3/8	1 1/2	37/64	X	X	-	-	0.8
MVL30	12.20	2.87	27/32	19/32	5/8	3/8	1 1/2	37/64	X	X	-	-	1.0
MVL34	12.20	3.15	1 5/64	23/32	7/8	1/2	1 11/16	37/64	X	X	X	-	1.1
MVL40	15.00	3.75	1 3/32	45/64	7/8	1/2	1 11/16	37/64	X	X	X	X	1.5
MVL44	19.00	4.15	1 3/32	45/64	7/8	1/2	1 11/16	37/64	X	X	X	X	1.75
1VM50	30.00	4.75	1 1/16	11/16	7/8	1/2	1 7/8	21/32	X	X	X	X	2.8

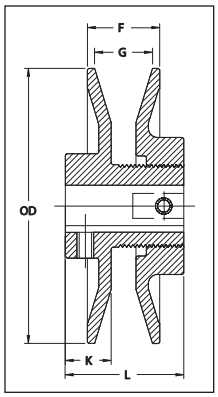

DATUM DIAMETERS

	Part No.	Datum Diameter, Inches									
		Min.	Max.	0 Turn Close	1 Turn Open	2 Turns Open	3 Turns Open	4 Turns Open	5 Turns Open	6 Turns Open	7 Turns Open
3L Belt	MVL25	1.6	2.4	2.4	2.2	2.0	1.8	1.6	-	-	-
	MVL30	1.8	2.6	2.6	2.4	2.2	2.0	1.8	-	-	-
	MVL34	1.7	2.5	2.5	2.3	2.1	1.9	1.7	-	-	-
	MVL40	2.3	3.1	3.1	2.9	2.7	2.5	2.3	-	-	-
	MVL44	2.7	3.5	3.5	3.3	3.1	2.9	2.7	-	-	-
	1VM50	3.3	4.1	4.1	3.9	3.7	3.5	3.3	-	-	-
A (4L) Belt	MVL25	1.6	2.2	-	-	2.2	2.0	1.8	1.6	-	-
	MVL30	2.0	2.6	-	-	2.6	2.4	2.2	2.0	-	-
	MVL34	1.9	2.9	2.9	2.7	2.5	2.3	2.1	1.9	-	-
	MVL40	2.4	3.4	3.4	3.2	3.0	2.8	2.6	2.4	-	-
	MVL44	2.8	3.8	3.8	3.6	3.4	3.2	3.0	2.8	-	-
	1VM50	3.4	4.4	4.4	4.2	4.0	3.8	3.6	3.4	-	-
B* (5L) Belt	MVL25	2.0	2.2	-	-	-	-	2.2	2.0	-	-
	MVL30	2.4	2.6	-	-	-	-	2.6	2.4	-	-
	MVL34	2.4	3.2	-	3.2	3.0	2.8	2.6	2.4	-	-
	MVL40	2.7	3.7	-	3.7	3.5	3.3	3.1	2.9	2.7	-
	MVL44	3.1	4.1	-	4.1	3.9	3.7	3.5	3.3	3.1	-
	1VM50	3.7	4.7	-	4.7	4.5	4.3	4.1	3.9	3.7	-

Pitch Dia. for 3L belts = Datum Dia. + .25"
Pitch Dia. for "A" (4L) belts = Datum Dia. + .25"
Pitch Dia. for "B" (5L) belts = Datum Dia. + .35"

Bore Range	Keyseat
1/2"	None
5/8" - 7/8"	3/16" X 3/32"

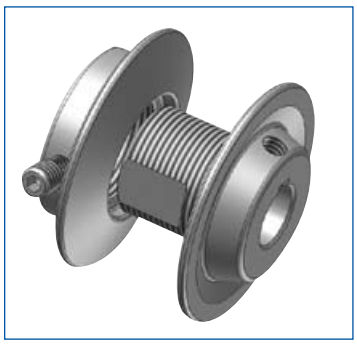

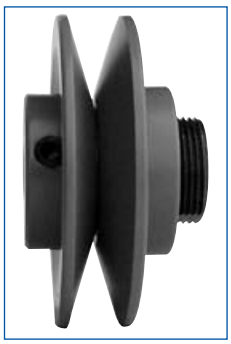

SHEAVES

8000 SERIES

DID YOU KNOW THAT...

- Stock Sizes - 1 and 2 grooves up to 25 HP
- Both 1 and 2 groove adjustable sheaves permit variations of as much as 30% in speed when used with a fixed diameter sheave
- Detailed Cross-Over Chart on pages 187-188
- Available in metric bores
- Larger sizes come with 2 set screws
- Other special bores are available, call for delivery terms

IMPORTANT REMINDER

Applications with a speed superior to 5000 ft./min. may require more accurate balancing.

Specify sheave and required bore diameter when ordering.

HOW TO ORDER

EXAMPLE: **8600X1-3/8**

8600	X1-3/8

8600: ADJUSTABLE PITCH SHEAVE SIZE
The first digit stands for 8000 series. Last three digits represent the approximate outside diameter (6.00)

X1-3/8: BORE SIZE (1 3/8")
Bore size: Metric bore sizes are designated with "MM" after the metric dimension (X 25MM). Inch bore sizes are designated with the whole inch followed by the fraction. For example, a 1.5" diameter bore would be 1-1/2.

Pulley Adjustment

Modify the sheave pitch diameter by rotating the adjustable flange on the threaded hub of the pulley. Once the required diameter is obtained, tighten the adjusting screw(s) on one of the two flat surfaces.

To obtain the same pitch diameter in both grooves of the D8000 series, tighten both movable flanges against the central flange, make trace marks on both flanges, then rotate both flanges the same number of turns.

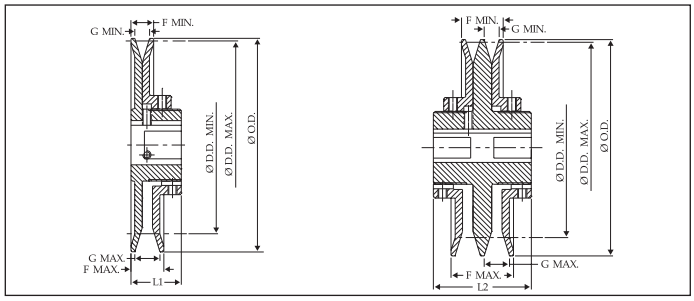

SINGLE GROOVE DOUBLE GROOVE

DIMENSIONS 1 GROOVE

Part No.	List Price $	O.D.	L1	F		G		Available Stock Bores	Weight (lbs)
				Max.	Min.	Max.	Min.		
8325	33.80	3.25	1 3/4	1 1/32	21/32	3/4	3/8	*1/2 · 5/8 · 3/4 · 7/8 · 1 · 1 1/8 9mm · 14mm · 19mm	2.0
8350	41.60	3.75	1 3/4	1 5/32	25/32	7/8	1/2	*1/2 · 5/8 · 3/4 · 7/8 · 1 · 1 1/8 9mm · 14mm · 19mm · 24mm · 28mm	2.0
8400	42.70	4.15	1 3/4	1 5/32	25/32	7/8	1/2	*1/2 · 5/8 · 3/4 · 7/8 · 1 · 1 1/8 12.7mm · 14mm · 19mm · 24mm · 28mm	2.5
8450[1]	43.20	4.75	1 3/4	1 5/32	25/32	7/8	1/2	*1/2 · 5/8 · 3/4 · 7/8 · 1 · 1 1/8 12.7mm · 14mm · 19mm · 24mm · 28mm	3.1
8550[2]	67.80	5.35	1 3/4	1 9/32	25/32	1	1/2	*1/2 · 5/8 · 3/4 · 7/8 · 1 · 1 1/8 · 1 3/8 · 1 5/8 12.7mm · 14mm · 19mm · 24mm · 28mm · 38mm	4.5
8600[2]	105.40	6.00	1 3/4	1 9/32	25/32	1	1/2	5/8 · 3/4 · 7/8 · 1 · 1 1/8 · 1 3/8 · 1 5/8 12.7mm · 19mm · 24mm · 28mm · 38mm · 42mm	5.0
8670[2]	106.80	6.70	1 3/4	1 9/32	25/32	1	1/2	5/8 · 3/4 · 7/8-1 · 1 1/8 · 1 3/8 · 1 5/8 12.7mm · 19mm · 24mm · 28mm · 38mm · 42mm	6.0
8740[2]	153.40	7.40	1 3/4	1 9/32	25/32	1	1/2	3/4 · 7/8 · 1 · 1 1/8 · 1 3/8 · 1 5/8 24mm · 28mm · 38mm · 42mm	7.0

DIMENSIONS 2 GROOVES

Part No.	List Price $	O.D.	L2	F		G		Available Stock Bores	Weight (lbs)
				Max.	Min.	Max.	Min.		
D8325	81.00	3.25	3 1/4	1 15/16	1 3/16	3/4	3/8	5/8 · 3/4 · 7/8 · 1 · 1 1/8 24mm · 28mm	3.5
D8350	93.20	3.75	3 3/8	2 3/16	1 7/16	7/8	1/2	5/8 · 3/4 · 7/8 · 1 · 1 1/8 28mm	4.2
D8400	100.30	4.15	3 3/8	2 3/16	1 7/16	7/8	1/2	5/8 · 3/4 · 7/8 · 1 · 1 1/8 24mm · 28mm	4.8
D8450[1]	105.80	4.75	3 3/8	2 3/16	1 7/16	7/8	1/2	5/8 · 3/4 · 7/8 · 1 · 1 1/8 12.7mm · 24mm · 28mm	6.0
D8550[2]	123.60	5.35	3 3/8	2 7/16	1 7/16	1	1/2	3/4 · 7/8 · 1 · 1 1/8 · 1 3/8 · 1 5/8 12.7mm · 19mm · 24mm · 28mm · 38mm	9.0
D8600[2]	167.20	6.00	3 3/8	2 7/16	1 7/16	1	1/2	3/4 · 7/8 · 1 · 1 1/8 · 1 3/8 · 1 5/8 12.7mm · 24mm · 28mm · 38mm · 42mm	10.8
D8670[2]	176.80	6.70	3 3/8	2 7/16	1 7/16	1	1/2	3/4 · 7/8 · 1 · 1 1/8 · 1 3/8 · 1 5/8 12.7mm · 24mm · 28mm · 38mm · 42mm	12.8
D8740[2]	272.60	7.40	3 3/8	2 7/16	1 7/16	1	1/2	3/4 · 7/8 · 1 · 1 1/8 · 1 3/8 · 1 5/8 24mm · 28mm · 38mm · 42mm	14.8

* Supplied without keyway
[1] Comes with two set screws at 120 degrees
[2] Comes with two set screws at 120 degrees and an ''H'' Key
U.S. Patent Nº 450 4249 Can. Patent Nº 1160478

8000 SERIES

DATUM DIAMETERS

	Part No.	Datum Diameter, Inches								
		Min.	Max.	0 Turn Close	1 Turn Open	2 Turns Open	3 Turns Open	4 Turns Open	5 Turns Open	6 Turns Open
(4L) "A" Belt	8325	2.30	3.10	-	3.10	2.90	2.70	2.50	2.30	—
	8350	2.40	3.40	3.40	3.20	3.00	2.80	2.60	2.40	—
	8400	2.80	3.80	3.80	3.60	3.40	3.20	3.00	2.80	—
	8450	3.40	4.40	4.40	4.20	4.00	3.80	3.60	3.40	—
	8550	3.95	5.03	5.03	4.76	4.49	4.22	3.95	—	—
	8600	4.33	5.68	5.68	5.41	5.14	4.87	4.60	4.33	—
	8670	5.03	6.38	6.38	6.11	5.84	5.57	5.30	5.03	—
	8740	5.73	7.08	7.08	6.81	6.54	6.27	6.00	5.73	—
(5L) "B" Belt	8325	2.50	3.10	-	—	—	3.10	2.90	2.70	2.50
	8350	2.70	3.70	-	3.70	3.50	3.30	3.10	2.90	2.70
	8400	3.10	4.10	-	4.10	3.90	3.70	3.50	3.30	3.10
	8450	3.70	4.70	-	4.70	4.50	4.30	4.10	3.90	3.70
	8550	3.80	5.15	-	5.15	4.88	4.61	4.34	4.07	3.80
	8600	4.45	5.80	-	5.80	5.53	5.26	4.99	4.72	4.45
	8670	5.15	6.50	-	6.50	6.23	5.96	5.69	5.42	5.15
	8740	5.85	7.20	-	7.20	6.93	6.66	6.39	6.12	5,85
"5V" Belt	8325	-	-	-	-	--	—	—	—	—
	8350	-	-	-	-	--	—	—	—	—
	8400	-	-	-	-	--	—	—	—	—
	8450	-	-	-	-	--	—	—	—	—
	8550	4.17	5.25	-	5.25	4.98	4.71	4.44	4.17	—
	8600	4.55	5.90	-	5.90	5.63	5.36	5.09	4.82	4.55
	8670	5.25	6.60	-	6.60	6.33	6.06	5.79	5.52	5.25
	8740	5.95	7.30	-	7.30	7.03	6.76	6.49	6.22	5.95

P.D. for "A" belts = Datum Dia. "A" belts + .25"
P.D. for "B" belts = Datum Dia. "B" belts + .35"
P.D. for "5V" belts = Datum Dia. "5V" belt + .10"

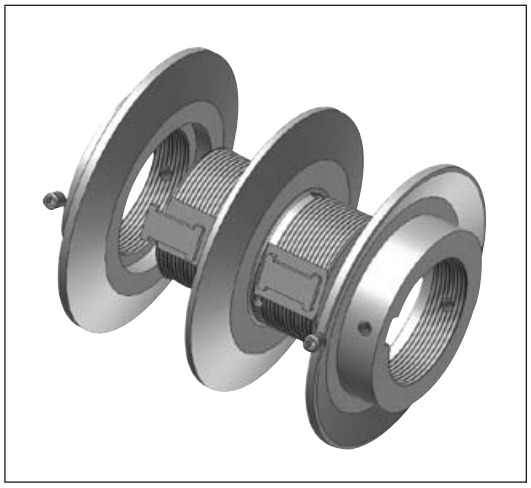

VP SERIES

DID YOU KNOW THAT...

- Baldor•Maska 1VP and 2VP Series are finished bore variable speed sheaves made of cast iron and designed for heavier duty service up to 25HP
- Available in single and double grooves, they offer a pitch range from 1.9" to 6.7" (A belt) and 2.4" to 7.0" (B belt)
- Type 2 model has positive locked-on settings

HOW TO ORDER

EXAMPLE: **1VP71X3/4**

1	VP71	X3/4

1: NUMBER OF GROOVES

VP71: ADJUSTABLE PITCH SHEAVE SIZE
Last 2 digits represent the approximate outside diameter (7.1")

X3/4: BORE SIZE (3/4")
Bore size: Inch bore sizes are designated with the whole inch followed by the fraction. For example, a 1.5" diameter bore would be 1-1/2.

SHEAVES

Pulley Adjustment

Modify the sheave pitch diameter by rotating the adjustable flange on the threaded hub of the pulley. Once the required diameter is obtained, tighten the adjusting screw(s) on one of the two flat surfaces.

To obtain the same pitch diameter in both grooves of the VP series, tighten both movable flanges against the central flange, make trace marks on both flanges, then rotate both flanges the same number of turns.

1VP & 2VP SERIES

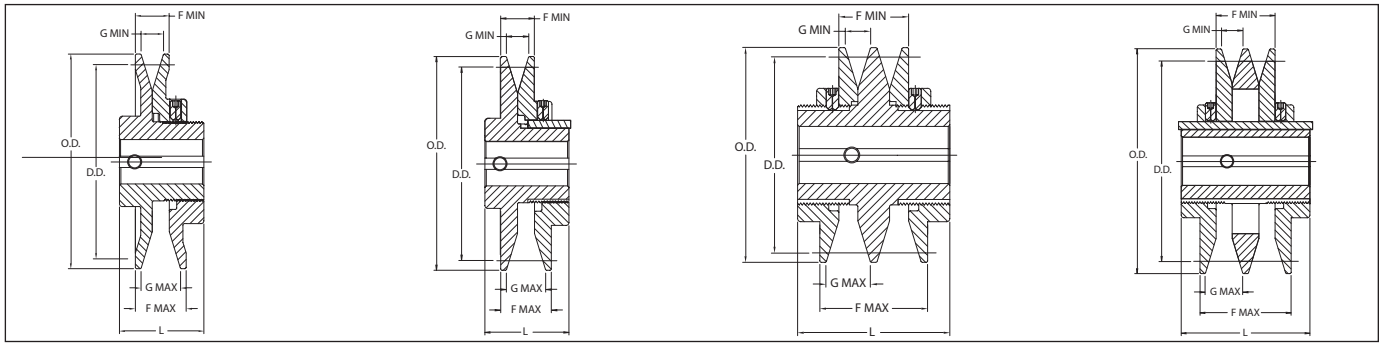

TYPE 1 (without key) | TYPE 2 | TYPE 3 (without key) | TYPE 4

DIMENSIONS

Part No.	List Price $	Type	O.D.	L	F		G		Available Stock Bores	Weight (lbs)
					Max.	Min.	Max.	Min.		
1VP25	36.96	1	2.50	1 1/2	13/16	9/16	5/8	3/8	*1/2	7
1VP30	37.52	1	2.87	1 21/32	13/16	9/16	5/8	3/8	*1/2 · 5/8 · 3/4	1.1
1VP34	47.20	1	3.15	1 7/8	1	11/16	13/16	1/2	*1/2 · 5/8 · 3/4 · 7/8	1.4
1VP40	47.80	1	3.75	1 7/8	1 1/16	11/16	7/8	1/2	*1/2 · 5/8 · 3/4 · 7/8	1.9
1VP44	51.60	1	4.15	1 7/8	1 1/16	11/16	7/8	1/2	*1/2 · 5/8 · 3/4	2.4
1VP44	71.60	2	4.15	1 7/8	1 1/8	3/4	7/8	1/2	7/8 · 1 · 1 1/8	2.9
1VP50	60.80	1	4.75	2	1 1/16	11/16	7/8	1/2	*1/2 · 5/8 · 3/4	2.9
1VP50	87.00	2	4.75	1 7/8	1 1/8	3/4	7/8	1/2	7/8 · 1 · 1 1/8	3.6
1VP56	90.80	1	5.35	1 7/8	1 1/16	11/16	7/8	1/2	*1/2 · 5/8 · 3/4	3.8
1VP56	117.20	2	5.35	1 7/8	1 1/8	3/4	7/8	1/2	7/8 · 1 · 1 1/8	4.4
1VP60	142.00	2	6.00	1 21/32	1 1/4	7/8	1 1/32	21/32	3/4 · 7/8 · 1 1/8 · 1 3/8	6.5
1VP62	143.30	2	5.95	1 29/32	1 1/8	3/4	7/8	1/2	5/8 · 3/4 · 7/8 · 1 · 1 1/8 · 1 1/4 · 1 3/8	6.1
1VP65	148.60	2	6.50	1 21/32	1 1/4	7/8	1 1/32	21/32	3/4 · 7/8 · 1 1/8 · 1 3/8 · 1 5/8	6.8
1VP68	149.20	2	6.55	1 29/32	1 1/8	3/4	7/8	1/2	5/8 · 3/4 · 7/8 · 1 · 1 1/8 · 1 1/4 · 1 3/8	7.3
1VP71	158.40	2	7.10	1 21/32	1 1/4	7/8	1 1/32	21/32	3/4 · 7/8 · 1 1/8 · 1 3/8 · 1 5/8	8.2
1VP75	211.40	2	7.50	1 21/32	1 1/4	7/8	1 1/32	21/32	3/4 · 7/8 · 1 1/8 · 1 3/8	9.2
2VP36	113.60	3	3.35	3	2	1 3/8	13/16	1/2	*1/2 · 5/8 · 3/4 · 7/8 ·1	3.4
2VP42	130.20	3	3.95	3	2 1/8	1 3/8	7/8	1/2	5/8 · 3/4 · 7/8 ·1 · 1 1/8	4.4
2VP50	150.00	4	4.75	3	2 1/8	1 3/8	7/8	1/2	5/8 · 3/4 · 7/8 ·1 · 1 1/8	6.3
2VP56	176.60	4	5.35	3	2 1/8	1 3/8	7/8	1/2	5/8 · 3/4 · 7/8 ·1 · 1 1/8	7.8
2VP60	225.60	4	6.00	3 1/4	2 3/8	1 5/8	1 1/32	21/32	3/4 · 7/8 · 1 1/8 · 1 3/8 · 1 5/8	10.6
2VP62	225.80	4	5.95	3	2 1/8	1 3/8	7/8	1/2	3/4 · 7/8 · 1 · 1 1/8 · 1 1/4 · 1 3/8	10.0
2VP65	242.00	4	6.50	3 1/4	2 3/8	1 5/8	1 1/32	21/32	3/4 · 7/8 · 1 1/8 · 1 3/8 · 1 5/8	12.3
2VP68	249.80	4	6.55	3	2 1/8	1 3/8	7/8	1/2	7/8 · 1 · 1 1/8 · 1 1/4 · 1 3/8 · 1 5/8 ·1 7/8	11.7
2VP71	256.00	4	7.10	3 1/4	2 3/8	1 5/8	1 1/32	21/32	3/4 · 7/8 · 1 1/8 · 1 3/8 · 1 5/8 ·1 7/8	14.6
2VP75	379.20	4	7.50	3 1/4	2 3/8	1 5/8	1 1/32	21/32	3/4 · 7/8 · 1 1/8 · 1 3/8 ·1 5/8 ·1 7/8	16.5

* Supplied without keyway thru the bore

DATUM DIAMETERS

	Part No.	Datum Diameter, Inches								
		Min.	Max.	0 Turn Close	1 Turn Open	2 Turns Open	3 Turns Open	4 Turns Open	5 Turns Open	6 Turns Open
3L Belt	1VP25	1.6	2.4	2.4	2.2	2.0	1.8	1.6	-	-
	1VP30	1.8	2.6	2.6	2.4	2.2	2.0	1.8	-	-
	1VP34	1.7	2.5	2.5	2.3	2.1	1.9	1.7	-	-
	2VP36	1.9	2.7	2.7	2.5	2.3	2.1	1.9	-	-
	1VP40	2.3	3.1	3.1	2.9	2.7	2.5	2.3	-	-
	2VP42	2.5	3.3	3.3	3.1	2.9	2.7	2.5	-	-
	1VP44	2.7	3.5	3.5	3.3	3.1	2.9	2.7	-	-
	1VP50 & 2VP50	3.3	4.1	4.1	3.9	3.7	3.5	3.3	-	-
	1VP56 & 2VP56	3.9	4.7	4.7	4.5	4.3	4.1	3.9	-	-
	1VP60 & 2VP60	-	-	-	-	-	-	-	-	-
	1VP62 & 2VP62	4.5	5.3	5.3	5.1	4.9	4.7	4.5	-	-
	1VP65 & 2VP65	-	-	-	-	-	-	-	-	-
	1VP68 & 2VP68	5.1	5.9	5.9	5.7	5.5	5.3	5.1	-	-
	1VP71 & 2VP71	-	-	-	-	-	-	-	-	-
	1VP75 & 2VP75	-	-	-	-	-	-	-	-	-
(4L) "A" Belt	1VP34	1.9	2.9	2.9	2.7	2.5	2.3	2.1	1.9	-
	2VP36	2.0	3.0	3.0	2.8	2.6	2.4	2.2	2.0	-
	1VP40	2.4	3.4	3.4	3.2	3.0	2.8	2.6	2.4	-
	2VP42	2.6	3.6	3.6	3.4	3.2	3.0	2.8	2.6	-
	1VP44	2.8	3.8	3.8	3.6	3.4	3.2	3.0	2.8	-
	1VP50 & 2VP50	3.4	4.4	4.4	4.2	4.0	3.8	3.6	3.4	-
	1VP56 & 2VP56	4.0	5.0	5.0	4.8	4.6	4.4	4.2	4.0	-
	1VP60 & 2VP60	4.2	5.2	5.2	5.0	4.8	4.6	4.4	4.2	-
	1VP62 & 2VP62	4.6	5.6	5.6	5.4	5.2	5.0	4.8	4.6	-
	1VP65 & 2VP65	4.7	5.7	5.7	5.5	5.3	5.1	4.9	4.7	-
	1VP68 & VP68	5.2	6.2	6.2	6.0	5.8	5.6	5.4	5.2	-
	1VP71& 2VP71	5.3	6.3	6.3	6.1	5.9	5.7	5.5	5.3	-
	1VP75 & 2VP75	5.7	6.7	6.7	6.5	6.3	6.1	5.9	5.7	-
(5L) "B" Belt	1VP34	2.4	3.2	-	3.2	3.0	2.8	2.6	2.4	-
	2VP36	2.5	3.3	-	3.3	3.1	2.9	2.7	2.5	-
	1VP40	2.7	3.7	-	3.7	3.5	3.3	3.1	2.9	2.7
	2VP42	2.9	3.9	-	3.9	3.7	3.5	3.3	3.1	2.9
	1VP44	3.1	4.1	-	4.1	3.9	3.7	3.5	3.3	3.1
	1VP50 & 2VP50	3.7	4.7	-	4.7	4.5	4.3	4.1	3.9	3.7
	1VP56 & 2VP56	4.3	5.3	-	5.3	5.1	4.9	4.7	4.5	4.3
	1VP60 & 2VP60	4.3	5.5	5.5	5.3	5.1	4.9	4.7	4.5	4.3
	1VP62 & 2VP62	4.9	5.9	-	5.9	5.7	5.5	5.3	5.1	4.9
	1VP65 & 2VP65	4.8	6.0	6.0	5.8	5.6	5.4	5.2	5.0	4.8
	1VP68 & 2VP68	5.5	6.5	-	6.5	6.3	6.1	5.9	5.7	5.5
	1VP71 & 2VP71	5.4	6.6	6.6	6.4	6.2	6.0	5.8	5.6	5.4
	1VP75 & 2VP75	5.8	7.0	7.0	6.8	6.6	6.4	6.2	6.0	5.8
"5V" Belt	1VP34	-	-	-	-	-	-	-	-	-
	2VP36	-	-	-	-	-	-	-	-	-
	1VP40	-	-	-	-	-	-	-	-	-
	2VP42	-	-	-	-	-	-	-	-	-
	1VP44	-	-	-	-	-	-	-	-	-
	1VP50 & 2VP50	-	-	-	-	-	-	-	-	-
	1VP56 & 2VP56	-	-	-	-	-	-	-	-	-
	1VP60 & 2VP60	-	-	-	-	-	-	-	-	-
	1VP62 & 2VP62	5.3	6.3	-	6.3	6.1	5.9	5.7	5.5	5.3
	1VP65 & 2VP65	5.2	6.4	6.4	6.2	6.0	5.8	5.6	5.4	5.2
	1VP68 & 2VP68	5.9	6.9	-	6.9	6.7	6.5	6.3	6.1	5.9
	1VP71 & 2VP71	5.8	7.0	7.0	6.8	6.6	6.4	6.2	6.0	5.8
	1VP75 & 2VP75	6.2	7.4	7.4	7.2	7.0	6.8	6.6	6.4	6.2

P.D. for "3L" belts = Datum Dia. "3L" belts + .25"
P.D. for "A" (4L) belts = Datum Dia. "A" belts + .25"
P.D. for "B" (5L) belts = Datum Dia. "B" belts + .35"
P.D. for "5V" belts = Datum Dia. "5V" belts + .10"

SHEAVES

MVS

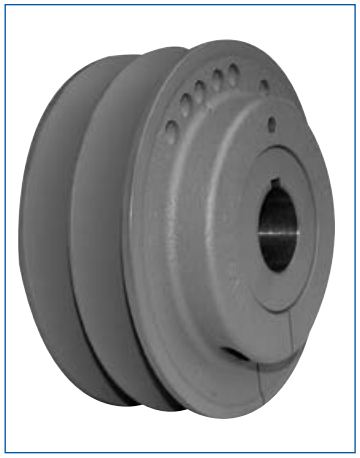

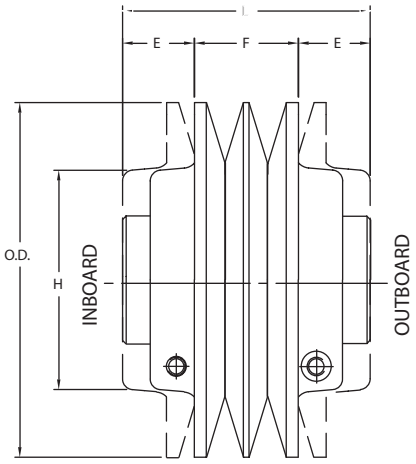

DID YOU KNOW THAT...

- Designed for up to 40 HP @ 1750 RPM
- Used with A, B, 3V & 5V belts

IMPORTANT REMINDER

- **Every turn of the adjustment screw moves the flange by 1/16".**

HOW TO ORDER

EXAMPLE: **MVS150X1-3/8**

MVS150	X1-3/8

MVS150: ADJUSTABLE PITCH SHEAVE SIZE
Last three digits represent the outside diameter in MM. 150 MM = 5.905"

X1-3/8: BORE SIZE (1 3/8")
Bore size: Inch bore sizes are designated with the whole inch followed by the fraction. For example, a 1.5" diameter bore would be 1-1/2.

Pulley Adjustment

Modify the sheave pitch diameter by using the adjustment screw. Every turn of the adjustment screw moves the flanges by 1/16". Once the required diameter is obtained, tighten the locking screw.

DIMENSIONS

Part No.	List Price $	O.D.	Dimensions						Stock Bores Marked "X"					WT (lbs)
			F		E		L	H	1 1/8	1 3/8	1 5/8	1 7/8	2 1/8	
			Min.	Max.	Min.	Max.								
MVS130	228.00	5.118	1.73	2.27	0.75	1.02	3.77	3.15	X	X	-	-	-	8.5
MVS150	250.00	5.905	1.73	2.59	0.77	1.20	4.13	3.62	X	X	X	-	-	12.1
MVS170	272.00	6.692	1.73	2.59	0.77	1.20	4.13	3.62	X	X	X	-	-	14.8
MVS190	294.00	7.480	1.73	2.59	0.77	1.20	4.13	5.12	-	X	X	X	-	23.2
MVS210	316.00	8.268	1.73	2.59	0.77	1.20	4.13	5.12	-	X	X	X	X	27.0
MVS230	338.00	9.055	1.73	2.59	0.77	1.20	4.13	5.12	-	X	X	X	X	30.40

DATUM DIAMETERS

	Part No.	Datum Diameter, Inches									
		Min.	Max.	0 Turn Close	1 Turn Open	2 Turns Open	3 Turns Open	4 Turns Open	5 Turns Open	6 Turns Open	7 Turns Open
A Belt	MVS130	3.45	4.47	4.47	4.26	4.06	3.85	3.65	3.45	-	-
	MVS150	4.23	5.25	5.25	5.05	4.85	4.64	4.44	4.23	-	-
	MVS170	4.81	6.04	6.04	5.84	5.63	5.43	5.22	5.02	4.81	-
	MVS190	5.60	6.83	6.83	6.62	6.42	6.21	6.01	5.81	5.60	-
	MVS210	6.40	7.63	7.63	7.43	7.22	7.02	6.81	6.61	6.40	-
	MVS230	7.19	8.42	8.42	8.21	8.01	7.81	7.60	7.40	7.19	-
B Belt	MVS130	3.63	4.86	4.86	4.65	4.45	4.24	4.04	3.84	3.63	-
	MVS150	4.21	5.65	5.65	5.44	5.24	5.03	4.83	4.62	4.42	4.21
	MVS170	5.00	6.43	6.43	6.23	6.02	5.82	5.61	5.41	5.21	5.00
	MVS190	5.79	7.22	7.22	7.01	6.81	6.60	6.40	6.20	5.99	5.79
	MVS210	6.59	8.02	8.02	7.82	7.61	7.41	7.20	7.00	6.80	6.59
	MVS230	7.38	8.81	8.81	8.61	8.40	8.20	7.99	7.79	7.58	7.38
3V Belt	MVS130	3.56	4.17	4.17	3.97	3.77	3.56	-	-	-	-
	MVS150	4.35	4.96	4.96	4.76	4.55	4.35	-	-	-	-
	MVS170	5.13	5.75	5.75	5.54	5.34	5.13	-	-	-	-
	MVS190	5.92	6.53	6.53	6.33	6.13	5.92	-	-	-	-
	MVS210	6.73	7.34	7.34	7.13	6.93	6.73	-	-	-	-
	MVS230	7.51	8.13	8.13	7.92	7.72	7.51	-	-	-	-
5V Belt	MVS130	-	-	-	-	-	-	-	-	-	-
	MVS150*	4.31	5.74	5.74	5.54	5.33	5.13	4.93	4.72	4.52	4.31
	MVS170*	5.10	6.53	6.53	6.33	6.12	5.92	5.71	5.51	5.30	5.10
	MVS190	5.88	7.32	7.32	7.11	6.91	6,70	6.50	6.29	6.09	5.88
	MVS210	6.69	8.12	8.12	7.92	7.71	7.51	7.30	7.10	6.89	6.69
	MVS230	7.48	8.91	8.91	8.70	8.50	8.29	8.09	7.89	7.68	7.48

* IMPORTANT: Recommended for use with narrow cog belts only.
P.D. for "A" belt = Datum Dia. "A" belt + .25
P.D. for "B" belt= Datum Dia. "B" belt + .35
P.D. for "3V" belts = Datum Dia. "3V" belts + .05
P.D. for "5V" belts = Datum Dia. "5V" belts + .10

CLASSICAL
A/B COMBINATION, C & D

DID YOU KNOW THAT...

- Complete line in stock, including larger models
- Designed for use with QD bushing & corresponding belts
- A/B models from 1-8; 10 grooves 3.75"- 38.35"
- C model from 1-10; 12 grooves; 5.4"-58.6"
- D model from 3-6; 8; 10; 12 grooves; 12.6"-58.6"

NEW
A/B & C groove sizes

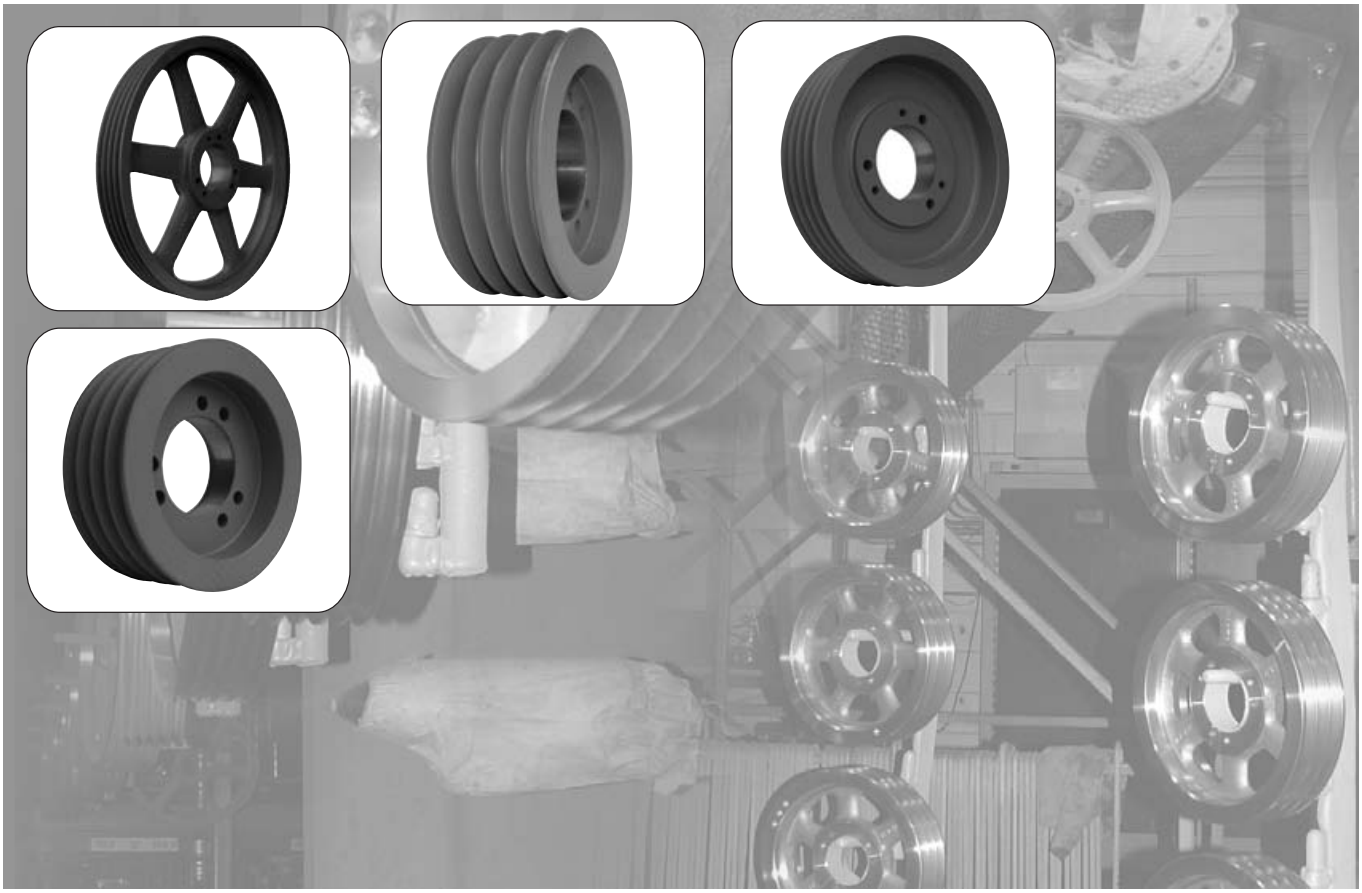

IMPORTANT REMINDER

•DO NOT use these gray cast iron sheaves with rim speeds in excess of 6500 feet per minute. Note that the max. RPM indicated on the arm of the sheave is based on the 6500 ft/min. limit, and doesn't take into consideration the need for dynamic balancing (two planes). Please refer to the chart on page 30 to verify the validity of dynamic balancing in your application.

All operational PT products when used in a drive are potentially dangerous and must be guarded by the user as required by applicable laws, regulations, standards and good safety practice. (Refer to ANSI Standard B15.1)

• When ordering a sheave to be dynamically balanced, you must specify the sheave operational speed. Baldor recommends ordering the matching bushing with the sheave to ensure a balancing grade of 6.3. If the bushing is not ordered at the same time, a disclaimer will be sent to the customer discharging Baldor from possible vibration problems related to the drive.

HOW TO ORDER

EXAMPLE: **6B70**

6	B	70

6: NUMBER OF GROOVES
B: "A/B" COMBINATION SHEAVE SECTION
70: DATUM DIAMETER FOR "B" BELTS (7.0")

NOTE:

1 For mounting instructions with QD bushings, see page 9.

2 All Charts: The type of sheave construction is indicated in the column entitled « T ». The number refers to the drawing and the letter as follows: A = arms; B = block; W = web.

3 "B" Column indicates the corresponding bushing size required.

4 All dimensions are to the closest fraction.

SHEAVES

"A/B" COMBINATION

DIMENSIONS 1 GROOVE

Datum dia.		O.D.	Part No	List Price $	F = 7/8 up to 7.15 O.D. & 1 inch thereafter					
A(4L) Belts	B(5L) Belts				H	Type	B	L	E	Wt
3.0	3.4	3.75	**1B34**[1]	26.00	5/8	11B	SH	1 1/4	1/4	1.2
3.2	3.6	3.95	**1B36**	27.00	1/2	6B	SH	1 1/4	1/8	1.3
3.4	3.8	4.15	**1B38**	28.00	1/2	6B	SH	1 1/4	1/8	1.6
3.6	4.0	4.35	**1B40**	29.00	1/2	6B	SH	1 1/4	1/8	1.9
3.8	4.2	4.55	**1B42**	30.00	1/2	6B	SH	1 1/4	1/8	2.1
4.0	4.4	4.75	**1B44**	31.00	1/2	6B	SH	1 1/4	1/8	2.4
4.2	4.6	4.95	**1B46**	32.00	7/16	7B	SDS	1 5/16	0	2.4
4.4	4.8	5.15	**1B48**	33.00	7/16	7B	SDS	1 5/16	0	2.8
4.6	5.0	5.35	**1B50**	34.00	7/16	7B	SDS	1 5/16	0	3.1
4.8	5.2	5.55	**1B52**	35.00	7/16	7B	SDS	1 5/16	0	3.3
5.0	5.4	5.75	**1B54**	36.00	7/16	7B	SDS	1 5/16	0	3.7
5.2	5.6	5.95	**1B56**	37.00	7/16	7B	SDS	1 5/16	0	4.0
5.4	5.8	6.15	**1B58**	38.00	7/16	7B	SDS	1 5/16	0	4.3
5.6	6.0	6.35	**1B60**	40.00	7/16	7B	SDS	1 5/16	0	4.7
5.8	6.2	6.55	**1B62**	42.00	7/16	7B	SDS	1 5/16	0	5.1
6.0	6.4	6.75	**1B64**	44.00	7/16	7B	SDS	1 5/16	0	5.4
6.2	6.6	6.95	**1B66**	48.00	7/16	7B	SDS	1 5/16	0	5.5
6.4	6.8	7.15	**1B68**	50.00	7/16	7B	SDS	1 5/16	0	5.5
6.6	7.0	7.35	**1B70**	52.00	9/16	6A	SDS	1 5/16	1/4	6.0
7.0	7.4	7.75	**1B74**	56.00	9/16	6A	SDS	1 5/16	1/4	6.3
7.6	8.0	8.35	**1B80**	58.00	9/16	6A	SDS	1 5/16	1/4	6.7
8.2	8.6	8.95	**1B86**	62.00	9/16	6A	SDS	1 5/16	1/4	7.7
8.6	9.0	9.35	**1B90**	63.00	9/16	6A	SDS	1 5/16	1/4	8.6
9.0	9.4	9.75	**1B94**	64.00	9/16	6A	SDS	1 5/16	1/4	9.1
10.6	11.0	11.35	**1B110**	76.00	9/16	6A	SDS	1 5/16	1/4	11.4
12.0	12.4	12.75	**1B124**	90.00	9/16	6A	SDS	1 5/16	1/4	13.0
13.2	13.6	13.95	**1B136**	96.00	9/16	6A	SDS	1 5/16	1/4	13.3
15.0	15.4	15.75	**1B154**	116.00	11/16	5A	SK	1 7/8	3/16	20.7
15.6	16.0	16.35	**1B160**	136.00	7/8	3A	SK	1 7/8	0	22.1
18.0	18.4	18.75	**1B184**	156.00	15/16	10A	SK	1 7/8	1/16	26.0
19.6	20.0	20.35	**1B200**	230.00	13/16	5A	SK	1 7/8	1/16	28.2
24.6	25.0	25.35	**1B250**	350.00	15/16	10A	SK	1 7/8	1/16	39.6

P.D. for "A" (4L) Belts = Datum Dia. + .35" = O.D. - .40 P.D. for "B" (5L) Belts = O.D.

[1] Reverse mount only.

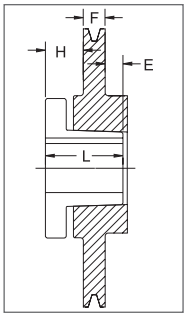

TYPE 3

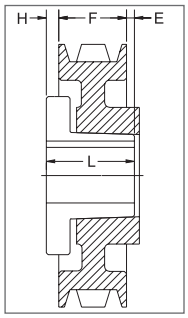

TYPE 5

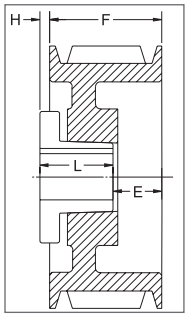

TYPE 6

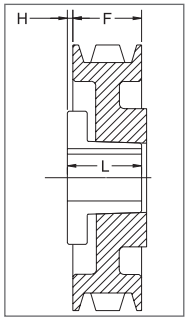

TYPE 7

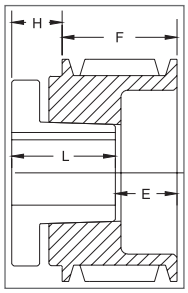

TYPE 10

"A/B" COMBINATION

DIMENSIONS 2 GROOVES

Datum dia.		O.D.	Part No	List Price $	F = 1 3/4 inches					
A(4L) Belts	B(5L) Belts				H	Type	B	L	E	Wt
3.0	3.4	3.75	**2B34[1]***	**38.00**	5/8	11B	SH	1 1/4	1 1/8	2.5
3.2	3.6	3.95	**2B36[2]**	**40.00**	15/32	6B	SH	1 1/4	31/32	2.5
3.4	3.8	4.15	**2B38[2]**	**42.00**	15/32	6B	SH	1 1/4	31/32	2.9
3.6	4.0	4.35	**2B40[2]**	**44.00**	15/32	6B	SH	1 1/4	31/32	3.4
3.8	4.2	4.55	**2B42***	**46.00**	1/16	1B	SH	1 1/4	7/16	3.5
4.0	4.4	4.75	**2B44**	**48.00**	1/16	1B	SH	1 1/4	7/16	3.8
4.2	4.6	4.95	**2B46***	**50.00**	0	4B	SDS	1 5/16	7/16	3.9
4.4	4.8	5.15	**2B48**	**52.00**	0	4B	SDS	1 5/16	7/16	4.3
4.6	5.0	5.35	**2B50**	**54.00**	0	4B	SDS	1 5/16	7/16	4.8
4.8	5.2	5.55	**2B52**	**56.00**	0	4B	SDS	1 5/16	7/16	5.2
5.0	5.4	5.75	**2B54**	**58.00**	0	4B	SDS	1 5/16	7/16	5.6
5.2	5.6	5.95	**2B56**	**60.00**	0	4B	SDS	1 5/16	7/16	6.0
5.4	5.8	6.15	**2B58**	**62.00**	0	4W	SDS	1 5/16	7/16	6.1
5.6	6.0	6.35	**2B60**	**64.00**	0	4W	SDS	1 5/16	7/16	6.5
5.8	6.2	6.55	**2B62**	**66.00**	0	4W	SDS	1 5/16	7/16	6.8
6.0	6.4	6.75	**2B64**	**68.00**	0	4W	SDS	1 5/16	7/16	7.4
6.2	6.6	6.95	**2B66**	**69.00**	0	4W	SDS	1 5/16	7/16	7.6
6.4	6.8	7.15	**2B68**	**71.00**	0	4W	SDS	1 5/16	7/16	7.9
6.6	7.0	7.35	**2B70**	**72.00**	3/8	6W	SK	1 7/8	1/4	9.3
7.0	7.4	7.75	**2B74**	**73.00**	3/8	6W	SK	1 7/8	1/4	10.5
7.6	8.0	8.35	**2B80**	**74.00**	3/8	6W	SK	1 7/8	1/4	11.6
8.2	8.6	8.95	**2B86**	**76.00**	3/8	6A	SK	1 7/8	1/4	11.7
8.6	9.0	9.35	**2B90**	**77.00**	3/8	6A	SK	1 7/8	1/4	12.2
9.0	9.4	9.75	**2B94**	**78.00**	3/8	6A	SK	1 7/8	1/4	13.3
10.6	11.0	11.35	**2B110**	**92.00**	3/8	6A	SK	1 7/8	1/4	15.1
12.0	12.4	12.75	**2B124**	**100.00**	9/16	6A	SK	1 7/8	7/16	18.4
13.2	13.6	13.95	**2B136**	**120.00**	3/8	6A	SK	1 7/8	1/4	23.5
15.0	15.4	15.75	**2B154**	**168.00**	3/8	6A	SK	1 7/8	1/4	26.4
15.6	16.0	16.35	**2B160**	**178.00**	3/8	6A	SK	1 7/8	1/4	28.1
18.0	18.4	18.75	**2B184**	**224.00**	3/8	6A	SK	1 7/8	1/4	36.0
19.6	20.0	20.35	**2B200**	**260.00**	11/16	6A	SF	2	7/16	37.0
24.6	25.0	25.35	**2B250**	**396.00**	3/8	6A	SF	2	1/8	66.0
29.6	30.0	30.35	**2B300**	**440.00**	7/16	6A	SF	2	3/16	73.3
37.6	38.0	38.35	**2B380**	**840.00**	11/32	6A	SF	2	3/32	95.0

P.D. for "A" (4L) Belts = Datum Dia. + .35" = O.D. - .40 P.D. for "B" (5L) Belts = O.D.

[1] Reverse mount only.

[2] This sheave can only be reverse mounted with standard bushing bolts. Specials bolts (not provided by Baldor) are required for standard mount. (see page 9)

* Mounting bolts are supplied by Baldor with this sheave.

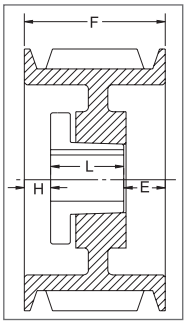

TYPE 1

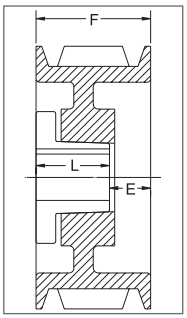

TYPE 4

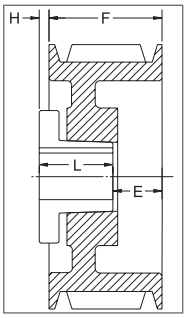

TYPE 6

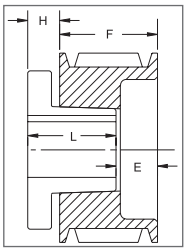

TYPE 11

"A/B" COMBINATION

DIMENSIONS 3 GROOVES

Datum dia. "A" Belts	Datum dia. "B" Belts	O.D.	Part No	List Price $	F = 2 1/2 inches H	Type	B	L	E	Wt
3.0	3.4	3.75	3B34[1]*	44.00	5/8	11B	SH	1 1/4	1 7/8	3.3
3.2	3.6	3.95	3B36[1]	46.00	1/2	6B	SH	1 1/4	1 3/4	3.6
3.4	3.8	4.15	3B38[1]	48.00	1/2	6B	SH	1 1/4	1 3/4	4.0
3.6	4.0	4.35	3B40[1]	50.00	5/8	11B	SH	1 1/4	1 7/8	4.3
3.8	4.2	4.55	3B42*	52.00	7/16	1B	SH	1 1/4	13/16	4.5
4.0	4.4	4.75	3B44	54.00	7/16	1B	SH	1 1/4	13/16	5.0
4.2	4.6	4.95	3B46*	56.00	3/8	1B	SD	1 13/16	5/16	5.6
4.4	4.8	5.15	3B48	58.00	3/8	1B	SD	1 13/16	5/16	6.2
4.6	5.0	5.35	3B50	60.00	3/8	1B	SD	1 13/16	5/16	6.9
4.8	5.2	5.55	3B52	62.00	3/8	1B	SD	1 13/16	5/16	7.5
5.0	5.4	5.75	3B54	64.00	3/8	1B	SD	1 13/16	5/16	8.1
5.2	5.6	5.95	3B56	66.00	3/8	1B	SD	1 13/16	5/16	8.7
5.4	5.8	6.15	3B58	68.00	3/8	1W	SD	1 13/16	5/16	9.0
5.6	6.0	6.35	3B60	70.00	3/8	1W	SD	1 13/16	5/16	9.5
5.8	6.2	6.55	3B62	72.00	3/8	1W	SD	1 13/16	5/16	9.6
6.0	6.4	6.75	3B64	76.00	3/8	1W	SD	1 13/16	5/16	10.3
6.2	6.6	6.95	3B66	78.00	3/8	1W	SD	1 13/16	5/16	10.4
6.4	6.8	7.15	3B68	80.00	3/8	1W	SD	1 13/16	5/16	10.7
6.6	7.0	7.35	3B70	82.00	1/8	6W	SK	1 7/8	3/4	11.9
7.0	7.4	7.75	3B74	84.00	1/8	6W	SK	1 7/8	3/4	12.4
7.6	8.0	8.35	3B80	88.00	1/8	6W	SK	1 7/8	3/4	13.4
8.2	8.6	8.95	3B86	96.00	1/8	6A	SK	1 7/8	3/4	13.7
8.6	9.0	9.35	3B90	100.00	1/8	6A	SK	1 7/8	3/4	15.0
9.0	9.4	9.75	3B94	104.00	1/8	6A	SK	1 7/8	3/4	16.2
10.6	11.0	11.35	3B110	124.00	1/8	6A	SK	1 7/8	3/4	21.9
12.0	12.4	12.75	3B124	144.00	1/8	6A	SK	1 7/8	3/4	25.0
13.2	13.6	13.95	3B136	156.00	1/8	6A	SK	1 7/8	3/4	28.1
15.0	15.4	15.75	3B154	200.00	1/8	6A	SK	1 7/8	3/4	30.8
15.6	16.0	16.35	3B160	212.00	1/8	6A	SK	1 7/8	3/4	31.7
18.0	18.4	18.75	3B184	244.00	1/8	6A	SK	1 7/8	3/4	41.6
19.6	20.0	20.35	3B200	324.00	3/16	6A	SF	2	11/16	49.0
24.6	25.0	25.35	3B250	440.00	3/16	6A	SF	2	11/16	67.0
29.6	30.0	30.35	3B300	500.00	3/16	6A	SF	2	11/16	96.0
37.6	38.0	38.35	3B380	880.00	3/8	6A	E	2 5/8	1/4	145.0

P.D. for "A" (4L) Belts = Datum Dia. + .35" = O.D. - .40 P.D. for "B" (5L) Belts = O.D.

[1] Reverse mount only.

* Mounting bolts are supplied by Baldor with this sheave.

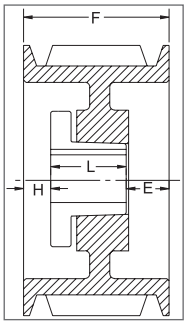

TYPE 1

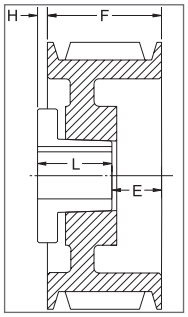

TYPE 6

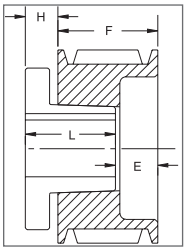

TYPE 11

SHEAVES

"A/B" COMBINATION

DIMENSIONS 4 GROOVES

Datum dia.		O.D.	Part No	List Price $	F = 3 1/4 inches					
"A" Belts	"B" Belts				H	Type	B	L	E	Wt
3.0	3.4	3.75	**4B34[1]***	**64.00**	1	10B	SD	1 13/16	2 7/16	4.2
3.2	3.6	3.95	**4B36[1]***	**66.00**	1	10B	SD	1 13/16	2 7/16	4.7
3.4	3.8	4.15	**4B38[1]***	**68.00**	1	10B	SD	1 13/16	2 7/16	5.1
3.6	4.0	4.35	**4B40[1]***	**70.00**	11/16	11B	SD	1 13/16	2 1/8	5.3
3.8	4.2	4.55	**4B42[1]***	**72.00**	11/16	11B	SD	1 13/16	2 1/8	5.9
4.0	4.4	4.75	**4B44***	**74.00**	11/16	11B	SD	1 13/16	2 1/8	6.5
4.2	4.6	4.95	**4B46***	**76.00**	5/8	1B	SD	1 13/16	13/16	6.7
4.4	4.8	5.15	**4B48**	**78.00**	5/8	1B	SD	1 13/16	13/16	7.4
4.6	5.0	5.35	**4B50**	**80.00**	5/8	1B	SD	1 13/16	13/16	8.2
4.8	5.2	5.55	**4B52**	**82.00**	5/8	1B	SD	1 13/16	13/16	8.9
5.0	5.4	5.75	**4B54**	**84.00**	5/8	1B	SD	1 13/16	13/16	9.6
5.2	5.6	5.95	**4B56**	**86.00**	5/8	1B	SD	1 13/16	13/16	10.4
5.4	5.8	6.15	**4B58**	**88.00**	5/8	1W	SD	1 13/16	13/16	10.7
5.6	6.0	6.35	**4B60**	**90.00**	5/8	1W	SD	1 13/16	13/16	11.0
5.8	6.2	6.55	**4B62**	**92.00**	5/8	1W	SD	1 13/16	13/16	11.7
6.0	6.4	6.75	**4B64**	**96.00**	5/8	1W	SD	1 13/16	13/16	11.7
6.2	6.6	6.95	**4B66**	**100.00**	5/8	1W	SD	1 13/16	13/16	11.8
6.4	6.8	7.15	**4B68**	**104.00**	5/8	1W	SD	1 13/16	13/16	12.5
6.6	7.0	7.35	**4B70**	**108.00**	3/16	1W	SK	1 7/8	1 3/16	13.1
7.0	7.4	7.75	**4B74**	**112.00**	3/16	1W	SK	1 7/8	1 3/16	14.9
7.6	8.0	8.35	**4B80**	**116.00**	3/16	1W	SK	1 7/8	1 3/16	15.6
8.2	8.6	8.95	**4B86**	**124.00**	3/16	1A	SK	1 7/8	1 3/16	17.2
8.6	9.0	9.35	**4B90**	**131.00**	3/16	1A	SK	1 7/8	1 3/16	17.5
9.0	9.4	9.75	**4B94**	**138.00**	3/16	1A	SK	1 7/8	1 3/16	19.0
10.6	11.0	11.35	**4B110**	**152.00**	3/16	1A	SK	1 7/8	1 3/16	25.4
12.0	12.4	12.75	**4B124**	**170.00**	3/16	1A	SK	1 7/8	1 3/16	28.7
13.2	13.6	13.95	**4B136**	**204.00**	3/16	1A	SK	1 7/8	1 3/16	34.0
15.0	15.4	15.75	**4B154**	**224.00**	3/16	1A	SF	2	1 1/16	37.8
15.6	16.0	16.35	**4B160**	**244.00**	3/16	1A	SF	2	1 1/16	41.6
18.0	18.4	18.75	**4B184**	**260.00**	3/16	1A	SF	2	1 1/16	48.0
19.6	20.0	20.35	**4B200**	**364.00**	3/16	1A	SF	2	1 1/16	61.4
24.6	25.0	25.35	**4B250**	**480.00**	1/16	6A	E	2 5/8	11/16	104.0
29.6	30.0	30.35	**4B300**	**560.00**	1/16	6A	E	2 5/8	11/16	120.0
37.6	38.0	38.35	**4B380**	**980.00**	0	4A	E	2 5/8	5/8	142.0

P.D. for "A" (4L) Belts = Datum Dia. + .35" = O.D. - .40 P.D. for "B" (5L) Belts = O.D.

[1] Reverse mount only.

* Mounting bolts are supplied by Maska with this sheave.

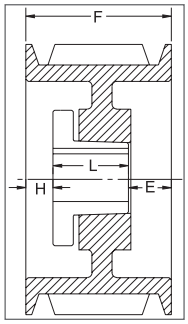

TYPE 1

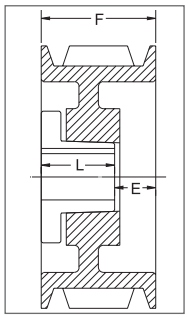

TYPE 4

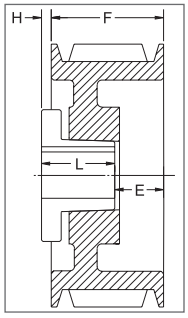

TYPE 6

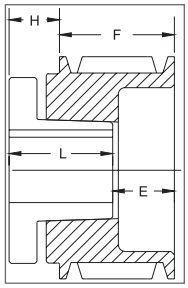

TYPE 10

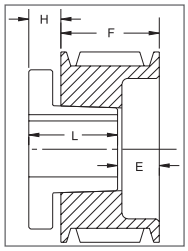

TYPE 11

SHEAVES

SHEAVES

"A/B" COMBINATION

DIMENSIONS 5 GROOVES

Datum dia. "A" Belts	Datum dia. "B" Belts	O.D.	Part No	List Price $	F = 4 inches H	Type	B	L	E	Wt
3.0	3.4	3.75	**5B34[1]***	**74.00**	1	10B	SD	1 13/16	3 3/16	4.9
3.2	3.6	3.95	**5B36[1]***	**76.00**	1	10B	SD	1 13/16	3 3/16	5.7
3.4	3.8	4.15	**5B38[1]***	**78.00**	1	10B	SD	1 13/16	3 3/16	6.1
3.6	4.0	4.35	**5B40[1]***	**80.00**	11/16	11B	SD	1 13/16	2 7/8	6.3
3.8	4.2	4.55	**5B42[1]***	**82.00**	11/16	11B	SD	1 13/16	2 7/8	7.0
4.0	4.4	4.75	**5B44[1]***	**84.00**	11/16	11B	SD	1 13/16	2 7/8	7.7
4.2	4.6	4.95	**5B46***	**86.00**	5/8	1B	SD	1 13/16	1 9/16	7.7
4.4	4.8	5.15	**5B48**	**90.00**	5/8	1B	SD	1 13/16	1 9/16	8.7
4.6	5.0	5.35	**5B50**	**92.00**	5/8	1B	SD	1 13/16	1 9/16	9.6
4.8	5.2	5.55	**5B52**	**94.00**	5/8	1B	SD	1 13/16	1 9/16	10.0
5.0	5.4	5.75	**5B54**	**96.00**	1/2	1B	SK	1 7/8	1 5/8	10.3
5.2	5.6	5.95	**5B56**	**98.00**	1/2	1B	SK	1 7/8	1 5/8	10.9
5.4	5.8	6.15	**5B58**	**100.00**	1/2	1B	SK	1 7/8	1 5/8	11.6
5.6	6.0	6.35	**5B60**	**106.00**	1/2	1B	SK	1 7/8	1 5/8	12.6
5.8	6.2	6.55	**5B62**	**110.00**	1/2	1B	SK	1 7/8	1 5/8	13.5
6.0	6.4	6.75	**5B64**	**116.00**	1/2	1B	SK	1 7/8	1 5/8	14.6
6.2	6.6	6.95	**5B66**	**120.00**	1/2	1B	SK	1 7/8	1 5/8	15.0
6.4	6.8	7.15	**5B68**	**124.00**	1/2	1B	SK	1 7/8	1 5/8	16.1
6.6	7.0	7.35	**5B70**	**132.00**	1/2	1B	SF	2	1 1/2	16.5
7.0	7.4	7.75	**5B74**	**150.00**	1/2	1B	SF	2	1 1/2	19.0
7.6	8.0	8.35	**5B80**	**154.00**	1/2	1W	SF	2	1 1/2	19.4
8.2	8.6	8.95	**5B86**	**164.00**	1/2	1W	SF	2	1 1/2	21.1
8.6	9.0	9.35	**5B90**	**168.00**	1/2	1A	SF	2	1 1/2	22.4
9.0	9.4	9.75	**5B94**	**172.00**	1/2	1A	SF	2	1 1/2	23.0
10.6	11.0	11.35	**5B110**	**194.00**	1/2	1A	SF	2	1 1/2	29.1
12.0	12.4	12.75	**5B124**	**208.00**	1/2	1A	SF	2	1 1/2	33.9
13.2	13.6	13.95	**5B136**	**240.00**	1/2	1A	SF	2	1 1/2	39.5
15.0	15.4	15.75	**5B154**	**268.00**	1/2	1A	SF	2	1 1/2	44.1
15.6	16.0	16.35	**5B160**	**294.00**	1/2	1A	SF	2	1 1/2	49.7
18.0	18.4	18.75	**5B184**	**316.00**	1/2	1A	SF	2	1 1/2	53.3
19.6	20.0	20.35	**5B200**	**390.00**	3/16	1A	E	2 5/8	1 3/16	77.6
24.6	25.0	25.35	**5B250**	**500.00**	3/16	1A	E	2 5/8	1 3/16	103.0
29.6	30.0	30.35	**5B300**	**696.00**	3/16	1A	E	2 5/8	1 3/16	131.0
37.6	38.0	38.35	**5B380**	**1080.00**	3/16	1A	E	2 5/8	1 3/16	169.0

P.D. for "A" (4L) Belts = Datum Dia. + .35" = O.D. - .40 P.D. for "B" (5L) Belts = O.D.

[1] Reverse mount only.

* Mounting bolts are supplied by Baldor with this sheave.

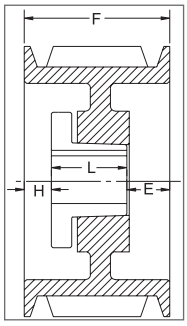

TYPE 1

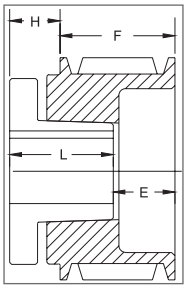

TYPE 10

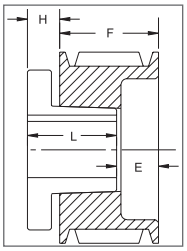

TYPE 11

"A/B" COMBINATION

DIMENSIONS 6 GROOVES

Datum dia. "A" Belts	Datum dia. "B" Belts	O.D.	Part No	List Price $	F = 4 3/4 inches H	Type	B	L	E	Wt
3.0	3.4	3.75	**6B34[1]***	**98.00**	1 3/32	10B	SD	1 13/16	4 1/32	6.1
3.2	3.6	3.95	**6B36[1]***	**100.00**	1 3/32	10B	SD	1 13/16	4 1/32	7.2
3.4	3.8	4.15	**6B38[1]***	**102.00**	1 3/32	10B	SD	1 13/16	4 1/32	7.4
3.6	4.0	4.35	**6B40[1]***	**104.00**	11/16	11B	SD	1 13/16	3 5/8	8.1
3.8	4.2	4.55	**6B42[1]***	**106.00**	11/16	11B	SD	1 13/16	3 5/8	8.5
4.0	4.4	4.75	**6B44[1]***	**110.00**	11/16	11B	SD	1 13/16	3 5/8	8.8
4.2	4.6	4.95	**6B46***	**112.00**	5/8	1B	SD	1 13/16	2 5/16	9.6
4.4	4.8	5.15	**6B48**	**114.00**	5/8	1B	SD	1 13/16	2 5/16	9.9
4.6	5.0	5.35	**6B50**	**116.00**	5/8	1B	SD	1 13/16	2 5/16	11.0
4.8	5.2	5.55	**6B52**	**118.00**	5/8	1B	SD	1 13/16	2 5/16	11.6
5.0	5.4	5.75	**6B54**	**120.00**	1/2	1B	SK	1 7/8	2 3/8	11.7
5.2	5.6	5.95	**6B56**	**122.00**	1/2	1B	SK	1 7/8	2 3/8	12.8
5.4	5.8	6.15	**6B58**	**124.00**	1/2	1B	SK	1 7/8	2 3/8	14.9
5.6	6.0	6.35	**6B60**	**126.00**	1/2	1B	SK	1 7/8	2 3/8	14.3
5.8	6.2	6.55	**6B62**	**130.00**	1/2	1B	SK	1 7/8	2 3/8	15.1
6.0	6.4	6.75	**6B64**	**134.00**	1/2	1B	SK	1 7/8	2 3/8	16.9
6.2	6.6	6.95	**6B66**	**138.00**	1/2	1B	SK	1 7/8	2 3/8	17.3
6.4	6.8	7.15	**6B68**	**142.00**	1/2	1B	SK	1 7/8	2 3/8	18.5
6.6	7.0	7.35	**6B70**	**150.00**	7/8	1B	SF	2	1 7/8	19.8
7.0	7.4	7.75	**6B74**	**204.00**	7/8	1B	SF	2	1 7/8	20.9
7.6	8.0	8.35	**6B80**	**208.00**	7/8	1W	SF	2	1 7/8	23.3
8.2	8.6	8.95	**6B86**	**220.00**	7/8	1W	SF	2	1 7/8	25.6
9.0	9.4	9.75	**6B94**	**230.00**	7/8	1W	SF	2	1 7/8	27.5
10.6	11.0	11.35	**6B110**	**248.00**	7/8	1A	SF	2	1 7/8	31.2
12.0	12.4	12.75	**6B124**	**276.00**	7/8	1A	SF	2	1 7/8	37.8
13.2	13.6	13.95	**6B136**	**280.00**	1 3/32	1A	SF	2	1 21/32	43.7
15.0	15.4	15.75	**6B154**	**300.00**	1 3/32	1A	SF	2	1 21/32	51.4
15.6	16.0	16.35	**6B160**	**328.00**	7/8	1A	SF	2	1 7/8	54.7
18.0	18.4	18.75	**6B184**	**348.00**	1 3/32	1A	SF	2	1 21/32	67.9
19.6	20.0	20.35	**6B200**	**464.00**	3/16	1A	E	2 5/8	1 15/16	86.0
24.6	25.0	25.35	**6B250**	**580.00**	5/16	1A	E	2 5/8	1 13/16	109.0
29.6	30.0	30.35	**6B300**	**780.00**	5/16	1A	E	2 5/8	1 13/16	151.0
37.6	38.0	38.35	**6B380**	**1120.00**	5/16	1A	E	2 5/8	1 13/16	207.0

P.D. for "A" (4L) Belts = Datum Dia. + .35" = O.D. - .40 P.D. for "B" (5L) Belts = O.D.

[1] Reverse mount only.

* Mounting bolts are supplied by Baldor with this sheave.

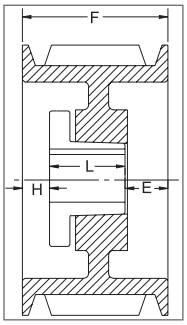

TYPE 1

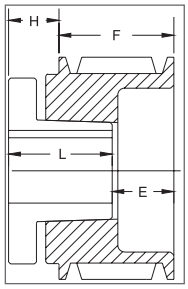

TYPE 10

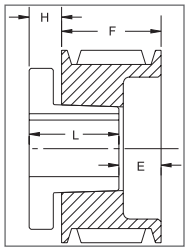

TYPE 11

"A/B" COMBINATION

DIMENSIONS 7 GROOVES

(Contact your sales representative for price & availability)

Datum dia.		O.D.	Part No	List Price $	F = 5 1/2 inches					
"A" Belts	"B" Belts				H	Type	B	L	E	Wt
3.0	3.4	3.75	-	-	-	-	-	-	-	-
3.2	3.6	3.95	-	-	-	-	-	-	-	-
3.4	3.8	4.15	-	-	-	-	-	-	-	-
3.6	4.0	4.35	-	-	-	-	-	-	-	-
3.8	4.2	4.55	-	-	-	-	-	-	-	-
4.0	4.4	4.75	-	-	-	-	-	-	-	-
4.2	4.6	4.95	-	-	-	-	-	-	-	-
4.4	4.8	5.15	-	-	-	-	-	-	-	-
4.6	5.0	5.35	-	-	-	-	-	-	-	-
4.8	5.2	5.55	-	-	-	-	-	-	-	-
5.0	5.4	5.75	**7B54**	-	1	1B	SK	1 7/8	2 5/8	13.0
5.2	5.6	5.95	**7B56**	-	1	1B	SK	1 7/8	2 5/8	15.0
5.4	5.8	6.15	**7B58**	-	1	1B	SK	1 7/8	2 5/8	17.0
5.6	6.0	6.35	**7B60**	-	1	1B	SF	2	2 1/2	14.0
5.8	6.2	6.55	**7B62**	-	1	1B	SF	2	2 1/2	16.0
6.0	6.4	6.75	**7B64**	-	1	1B	SF	2	2 1/2	19.0
6.2	6.6	6.95	**7B66**	-	1	1B	SF	2	2 1/2	18.0
6.4	6.8	7.15	**7B68**	-	1	1B	SF	2	2 1/2	18.0
6.6	7.0	7.35	**7B70**	-	1	1B	SF	2	2 1/2	19.5
7.0	7.4	7.75	**7B74**	-	1	1B	SF	2	2 1/2	23.0
7.6	8.0	8.35	**7B80**	-	1 5/16	1B	E	2 5/8	1 9/16	27.5
8.2	8.6	8.95	**7B86**	-	1 5/16	1B	E	2 5/8	1 9/16	31.0
9.0	9.4	9.75	**7B94**	-	1 5/16	1B	E	2 5/8	1 9/16	38.0
10.6	11.0	11.35	**7B110**	-	1 5/16	1B	E	2 5/8	1 9/16	36.0
12.0	12.4	12.75	**7B124**	-	1 5/16	1W	E	2 5/8	1 9/16	42.0
13.2	13.6	13.95	**7B136**	-	1 3/8	1A	E	2 5/8	1 1/2	49.0
15.0	15.4	15.75	**7B154**	-	1 3/8	1A	E	2 5/8	1 1/2	60.0
15.6	16.0	16.35	**7B160**	-	1 5/16	1A	E	2 5/8	1 9/16	66.0
18.0	18.4	18.75	**7B184**	-	3/32	1A	F	3 5/8	1 25/32	72.0
19.6	20.0	20.35	**7B200**	-	3/32	1A	F	3 5/8	1 25/32	97.0
24.6	25.0	25.35	**7B250**	-	3/32	1A	F	3 5/8	1 25/32	144.0
29.6	30.0	30.35	**7B300**	-	3/32	1A	F	3 5/8	1 25/32	155.0
37.6	38.0	38.35	**7B380**	-	3/32	1A	F	3 5/8	1 25/32	263.0

P.D. for "A" (4L) Belts = Datum Dia. + .35" = O.D. - .40 P.D. for "B" (5L) Belts = O.D.

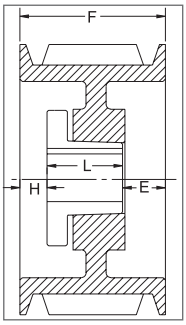

TYPE 1

SHEAVES

"A/B" COMBINATION

DIMENSIONS 8 GROOVES

Datum dia.		O.D.	Part No	List Price $	F = 6 1/4 inches					
"A" Belts	"B" Belts				H	Type	B	L	E	Wt
3.0	3.4	3.75	-	-	-	-	-	-	-	-
3.2	3.6	3.95	-	-	-	-	-	-	-	-
3.4	3.8	4.15	-	-	-	-	-	-	-	-
3.6	4.0	4.35	-	-	-	-	-	-	-	-
3.8	4.2	4.55	-	-	-	-	-	-	-	-
4.0	4.4	4.75	-	-	-	-	-	-	-	-
4.2	4.6	4.95	-	-	-	-	-	-	-	-
4.4	4.8	5.15	-	-	-	-	-	-	-	-
4.6	5.0	5.35	-	-	-	-	-	-	-	-
4.8	5.2	5.55	-	-	-	-	-	-	-	-
5.0	5.4	5.75	**8B54**	**180.00**	1	1B	SK	1 7/8	3 3/8	13.5
5.2	5.6	5.95	**8B56**	**184.00**	1	1B	SK	1 7/8	3 3/8	16.1
5.4	5.8	6.15	**8B58**	**188.00**	1	1B	SK	1 7/8	3 3/8	19.9
5.6	6.0	6.35	**8B60**	**192.00**	1	1B	SF	2	3 1/4	16.4
5.8	6.2	6.55	**8B62**	**196.00**	1	1B	SF	2	3 1/4	18.0
6.0	6.4	6.75	**8B64**	**200.00**	1	1B	SF	2	3 1/4	21.2
6.2	6.6	6.95	**8B66**	**208.00**	1	1B	SF	2	3 1/4	20.2
6.4	6.8	7.15	**8B68**	**212.00**	1	1B	SF	2	3 1/4	21.1
6.6	7.0	7.35	**8B70**	**260.00**	1	1B	SF	2	3 1/4	22.4
7.0	7.4	7.75	**8B74**	**284.00**	1	1B	SF	2	3 1/4	25.3
7.6	8.0	8.35	**8B80**	**288.00**	1 5/16	1B	E	2 5/8	2 5/16	30.0
8.2	8.6	8.95	**8B86**	**292.00**	1 5/16	1B	E	2 5/8	2 5/16	34.5
9.0	9.4	9.75	**8B94**	**300.00**	1 5/16	1B	E	2 5/8	2 5/16	40.7
10.6	11.0	11.35	**8B110**	**356.00**	1 5/16	1B	E	2 5/8	2 5/16	52.0
12.0	12.4	12.75	**8B124**	**372.00**	1 5/16	1W	E	2 5/8	2 5/16	53.0
13.2	13.6	13.95	**8B136**	**452.00**	1 3/8	1A	E	2 5/8	2 1/4	58.0
15.0	15.4	15.75	**8B154**	**500.00**	1 3/8	1A	E	2 5/8	2 1/4	63.5
15.6	16.0	16.35	**8B160**	**572.00**	1 5/16	1A	E	2 5/8	2 5/16	71.0
18.0	18.4	18.75	**8B184**	**636.00**	3/32	1A	F	3 5/8	2 17/32	108.0
19.6	20.0	20.35	**8B200**	**690.00**	3/32	1A	F	3 5/8	2 17/32	100.0
24.6	25.0	25.35	**8B250**	**880.00**	3/32	1A	F	3 5/8	2 17/32	152.0
29.6	30.0	30.35	**8B300**	**1260.00**	3/32	1A	F	3 5/8	2 17/32	186.0
37.6	38.0	38.35	**8B380**	**1740.00**	3/32	1A	F	3 5/8	2 17/32	278.0

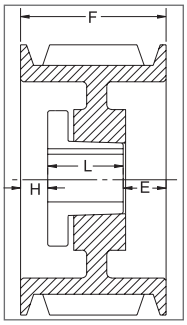

TYPE 1

"A/B" COMBINATION

DIMENSIONS 10 GROOVES

Datum dia. "A" Belts	Datum dia. "B" Belts	O.D.	Part No	List Price $	F = 7 3/4 inches H	Type	B	L	E	Wt
3.0	3.4	3.75	-	-	-	-	-	-	-	-
3.2	3.6	3.95	-	-	-	-	-	-	-	-
3.4	3.8	4.15	-	-	-	-	-	-	-	-
3.6	4.0	4.35	-	-	-	-	-	-	-	-
3.8	4.2	4.55	-	-	-	-	-	-	-	-
4.0	4.4	4.75	-	-	-	-	-	-	-	-
4.2	4.6	4.95	-	-	-	-	-	-	-	-
4.4	4.8	5.15	-	-	-	-	-	-	-	-
4.6	5.0	5.35	-	-	-	-	-	-	-	-
4.8	5.2	5.55	-	-	-	-	-	-	-	-
5.0	5.4	5.75	**10B54**	**280.00**	1 3/4	1B	SK	1 7/8	4 1/8	15.5
5.2	5.6	5.95	**10B56**	**288.00**	1 3/4	1B	SK	1 7/8	4 1/8	19.8
5.4	5.8	6.15	**10B58**	**296.00**	1 3/4	1B	SK	1 7/8	4 1/8	18.0
5.6	6.0	6.35	**10B60**	**304.00**	1 3/4	1B	SF	2	4	19.0
5.8	6.2	6.55	**10B62**	**312.00**	1 3/4	1B	SF	2	4	20.0
6.0	6.4	6.75	**10B64**	**320.00**	1 3/4	1B	SF	2	4	23.0
6.2	6.6	6.95	**10B66**	**332.00**	1 3/4	1B	SF	2	4	21.0
6.4	6.8	7.15	**10B68**	**344.00**	1 3/4	1B	SF	2	4	24.8
6.6	7.0	7.35	**10B70**	**352.00**	1 3/4	1B	SF	2	4	26.0
7.0	7.4	7.75	**10B74**	**360.00**	1 3/4	1B	SF	2	4	29.8
7.6	8.0	8.35	-	-	-	-	-	-	-	-
8.2	8.6	8.95	**10B86**	**372.00**	2 1/16	1B	E	2 5/8	3 1/16	39.6
9.0	9.4	9.75	**10B94**	**420.00**	2 1/16	1B	E	2 5/8	3 1/16	40.0
10.6	11.0	11.35	**10B110**	**520.00**	2 1/16	1B	E	2 5/8	3 1/16	52.0
12.0	12.4	12.75	**10B124**	**532.00**	2 1/16	1W	E	2 5/8	3 1/16	72.3
13.2	13.6	13.95	**10B136**	**636.00**	27/32	1A	F	3 5/8	3 9/32	75.8
15.0	15.4	15.75	**10B154**	**680.00**	27/32	1A	F	3 5/8	3 9/32	87.0
15.6	16.0	16.35	**10B160**	**760.00**	27/32	1A	F	3 5/8	3 9/32	100.0
18.0	18.4	18.75	**10B184**	**800.00**	27/32	1A	F	3 5/8	3 9/32	110.0
19.6	20.0	20.35	**10B200**	**860.00**	27/32	1A	F	3 5/8	3 9/32	118.0
24.6	25.0	25.35	**10B250**	**1160.00**	27/32	1A	F	3 5/8	3 9/32	183.0
29.6	30.0	30.35	**10B300**	**1380.00**	27/32	1A	F	3 5/8	3 9/32	234.0
37.6	38.0	38.35	**10B380**	**1780.00**	7/32	1A	J	4 1/2	3 1/32	321.0

P.D. for "A" (4L) Belts = Datum Dia. + .35" = O.D. - .40 P.D. for "B" (5L) Belts = O.D.

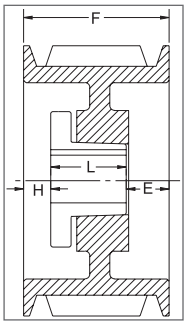

TYPE 1

SHEAVES

"C" SECTION

DIMENSIONS 1 GROOVE

Datum dia.	O.D.	Part No	List Price $	F = 1 3/8 inches					
				H	Type	B	L	E	Wt
5.0	5.4	-	-	-	-	-	-	-	-
6.0	6.4	-	-	-	-	-	-	-	-
7.0	7.4	**1C70**	**112.00**	9/16	5B	SF	2	1/16	9.4
7.5	7.9	**1C75**	**120.00**	9/16	5B	SF	2	1/16	11.5
8.0	8.4	**1C80**	**124.00**	9/16	5B	SF	2	1/16	13.3
8.5	8.9	**1C85**	**128.00**	9/16	5B	SF	2	1/16	15.6
9.0	9.4	**1C90**	**132.00**	19/32	5W	SF	2	1/32	14.4
9.5	9.9	**1C95**	**136.00**	19/32	5W	SF	2	1/32	16.0
10.0	10.4	**1C100**	**140.00**	11/16	6W	SF	2	1/16	17.4
10.5	10.9	**1C105**	**152.00**	11/16	6W	SF	2	1/16	17.9
11.0	11.4	**1C110**	**172.00**	17/32	5W	SF	2	3/32	20.0
12.0	12.4	**1C120**	**184.00**	11/16	6W	SF	2	1/16	21.7
13.0	13.4	**1C130**	**240.00**	11/16	6A	SF	2	1/16	17.8
14.0	14.4	**1C140**	**260.00**	11/16	6A	SF	2	1/16	22.2
16.0	16.4	**1C160**	**280.00**	11/16	6A	SF	2	1/16	24.2
18.0	18.4	**1C180**	**300.00**	11/16	6A	SF	2	1/16	32.1
20.0	20.4	**1C200**	**320.00**	11/16	6A	SF	2	1/16	36.0
24.0	24.4	**1C240**	**360.00**	11/16	6A	SF	2	1/16	47.0
27.0	27.4	-	-	-	-	-	-	-	-
30.0	30.4	-	-	-	-	-	-	-	-
36.0	36.4	-	-	-	-	-	-	-	-
44.0	44.4	-	-	-	-	-	-	-	-
50.0	50.4	-	-	-	-	-	-	-	-

P.D. for "C" Belts =O.D.

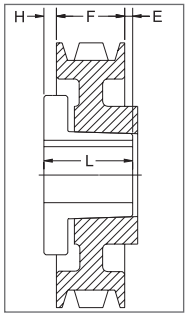

TYPE 5

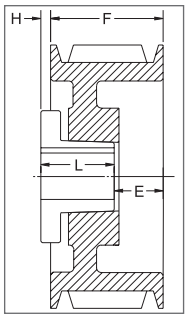

TYPE 6

SHEAVES

"C" SECTION

DIMENSIONS 2 GROOVES

Datum dia.	O.D.	Part No	List Price $	F = 2 3/8 inches					
				H	Type	B	L	E	Wt
5.0	5.4	-	-	-	-	-	-	-	-
6.0	6.4	**2C60**	**126.00**	1/16	1B	SF	2	5/16	8.0
7.0	7.4	**2C70**	**132.00**	0	1B	SF	2	3/8	12.8
7.5	7.9	**2C75**	**136.00**	0	1B	SF	2	3/8	14.9
8.0	8.4	**2C80**	**144.00**	0	1B	SF	2	3/8	17.0
8.5	8.9	**2C85**	**148.00**	0	1B	SF	2	3/8	19.2
9.0	9.4	**2C90**	**152.00**	0	1W	SF	2	3/8	20.7
9.5	9.9	**2C95**	**160.00**	0	1W	SF	2	3/8	22.9
10.0	10.4	**2C100**	**176.00**	0	1W	SF	2	3/8	22.0
10.5	10.9	**2C105**	**188.00**	0	1W	SF	2	3/8	23.4
11.0	11.4	**2C110**	**200.00**	0	1W	SF	2	3/8	25.7
12.0	12.4	**2C120**	**210.00**	1/4	6W	SF	2	5/8	28.6
13.0	13.4	**2C130**	**250.00**	1/4	6A	SF	2	5/8	35.7
14.0	14.4	**2C140**	**270.00**	1/4	6A	SF	2	5/8	40.2
16.0	16.4	**2C160**	**290.00**	1/4	6A	SF	2	5/8	39.4
18.0	18.4	**2C180**	**310.00**	1/4	6A	SF	2	5/8	47.3
20.0	20.4	**2C200**	**340.00**	1/4	6A	SF	2	5/8	54.6
24.0	24.4	**2C240**	**460.00**	1/4	6A	SF	2	5/8	63.0
27.0	27.4	**2C270**	**550.00**	29/32	5A	F	3 5/8	11/32	93.1
30.0	30.4	**2C300**	**620.00**	29/32	5A	F	3 5/8	11/32	94.0
36.0	36.4	-	-	-	-	-	-	-	-
44.0	44.4	-	-	-	-	-	-	-	-
50.0	50.4	-	-	-	-	-	-	-	-

P.D. for "C" Belts = O.D.

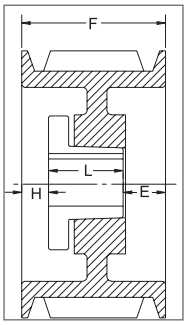

TYPE 1

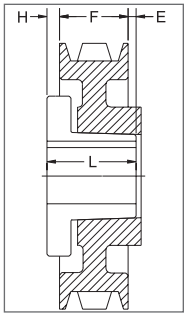

TYPE 5

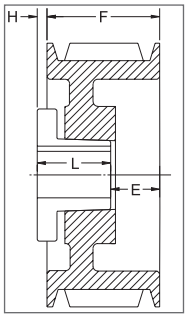

TYPE 6

SHEAVES

"C" SECTION

DIMENSIONS 3 GROOVES

Datum dia.	O.D.	Part No	List Price $	F = 3 3/8 inches					
				H	Type	B	L	E	Wt
5.0	5.4	**3C50***	**136.00**	5/16	1B	SD	1 13/16	1 1/4	8.5
5.0	5.4	**3C50SK[1]**	**136.00**	13/16	11B	SK	1 7/8	2 5/16	8.0
5.6	6.0	**3C56**	**138.00**	5/8	1B	SD	1 13/16	15/16	11.0
6.0	6.4	**3C60**	**140.00**	1/16	1B	SF	2	1 5/16	10.2
7.0	7.4	**3C70**	**144.00**	1/2	1B	SF	2	7/8	15.8
7.5	7.9	**3C75**	**148.00**	1/2	1B	SF	2	7/8	18.2
8.0	8.4	**3C80**	**156.00**	11/16	1B	E	2 5/8	1/16	20.3
8.5	8.9	**3C85**	**176.00**	11/16	1B	E	2 5/8	1/16	24.1
9.0	9.4	**3C90**	**188.00**	11/16	1B	E	2 5/8	1/16	27.0
9.5	9.9	**3C95**	**200.00**	11/16	1W	E	2 5/8	1/16	29.8
10.0	10.4	**3C100**	**220.00**	11/16	1W	E	2 5/8	1/16	33.8
10.5	10.9	**3C105**	**230.00**	11/16	1W	E	2 5/8	1/16	36.3
11.0	11.4	**3C110**	**240.00**	11/16	1W	E	2 5/8	1/16	37.5
12.0	12.4	**3C120**	**250.00**	11/16	1W	E	2 5/8	1/16	43.7
13.0	13.4	**3C130**	**290.00**	11/16	1A	E	2 5/8	1/16	44.8
14.0	14.4	**3C140**	**320.00**	11/16	1A	E	2 5/8	1/16	49.8
16.0	16.4	**3C160**	**330.00**	11/16	1A	E	2 5/8	1/16	58.3
18.0	18.4	**3C180**	**350.00**	11/16	1A	E	2 5/8	1/16	63.1
20.0	20.4	**3C200**	**400.00**	1/16	6A	E	2 5/8	13/16	81.0
24.0	24.4	**3C240**	**480.00**	1/16	6A	E	2 5/8	13/16	84.0
27.0	27.4	**3C270**	**580.00**	13/32	6A	F	3 5/8	5/32	115.5
30.0	30.4	**3C300**	**640.00**	13/32	6A	F	3 5/8	5/32	118.0
36.0	36.4	**3C360**	**980.00**	13/32	6A	F	3 5/8	5/32	187.0
44.0	44.4	**3C440**	**1720.00**	13/32	6A	F	3 5/8	5/32	232.0
50.0	50.4	**3C500**	**1920.00**	13/32	6A	F	3 5/8	5/32	290.0

P.D. for "C" Belts = O.D.
[1] Reverse mount only.
* Mounting bolts are supplied by Baldor with this sheave.

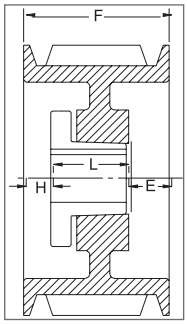

TYPE 1

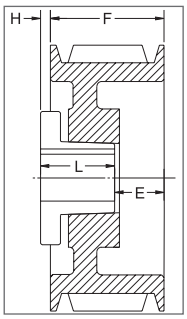

TYPE 6

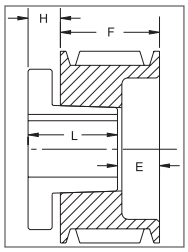

TYPE 11

SHEAVES

"C" SECTION

DIMENSIONS 4 GROOVES

Datum dia.	O.D.	Part No	List Price $	F = 4 3/8 inches					
				H	Type	B	L	E	Wt
5.0	5.4	**4C50***	**156.00**	5/8	1B	SD	1 13/16	1 15/16	10.6
5.0	5.4	**4C50SK[1]**	**156.00**	13/16	11B	SK	1 7/8	3 5/16	10.0
5.6	6.0	**4C56**	**158.00**	7/8	1B	SD	1 13/16	1 11/16	13.4
6.0	6.4	**4C60**	**160.00**	1/16	1B	SF	2	2 5/16	12.1
7.0	7.4	**4C70**	**164.00**	3/4	1B	SF	2	1 5/8	19.1
7.5	7.9	**4C75**	**172.00**	3/4	1B	SF	2	1 5/8	21.8
8.0	8.4	**4C80**	**196.00**	15/16	1B	E	2 5/8	13/16	23.7
8.5	8.9	**4C85**	**208.00**	15/16	1B	E	2 5/8	13/16	27.7
9.0	9.4	**4C90**	**224.00**	15/16	1B	E	2 5/8	13/16	31.3
9.5	9.9	**4C95**	**228.00**	15/16	1B	E	2 5/8	13/16	35.0
10.0	10.4	**4C100**	**240.00**	15/16	1B	E	2 5/8	13/16	39.6
10.5	10.9	**4C105**	**260.00**	15/16	1W	E	2 5/8	13/16	42.4
11.0	11.4	**4C110**	**272.00**	15/16	1W	E	2 5/8	13/16	43.4
12.0	12.4	**4C120**	**300.00**	15/16	1W	E	2 5/8	13/16	49.0
13.0	13.4	**4C130**	**336.00**	15/16	1A	E	2 5/8	13/16	54.0
14.0	14.4	**4C140**	**364.00**	15/16	1A	E	2 5/8	13/16	56.5
16.0	16.4	**4C160**	**420.00**	15/16	1A	E	2 5/8	13/16	66.0
18.0	18.4	**4C180**	**430.00**	15/16	1A	E	2 5/8	13/16	73.4
20.0	20.4	**4C200**	**450.00**	7/16	1A	E	2 5/8	1 5/16	87.0
24.0	24.4	**4C240**	**560.00**	3/32	1A	F	3 5/8	21/32	114.0
27.0	27.4	**4C270**	**660.00**	3/32	1A	F	3 5/8	21/32	140.5
30.0	30.4	**4C300**	**760.00**	3/32	1A	F	3 5/8	21/32	141.0
36.0	36.4	**4C360**	**1120.00**	5/32	1A	F	3 5/8	19/32	192.0
44.0	44.4	**4C440**	**1800.00**	7/32	2A	J	4 1/2	11/32	286.0
50.0	50.4	**4C500**	**2120.00**	7/32	2A	J	4 1/2	11/32	360.0

P.D. for "C" Belts = O.D.
[1] Reverse mount only.
* Mounting bolts are supplied by Baldor with this sheave.

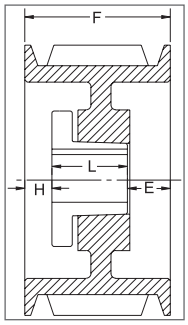

TYPE 1

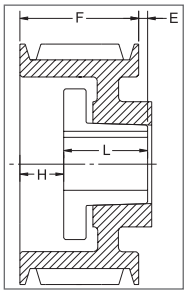

TYPE 2

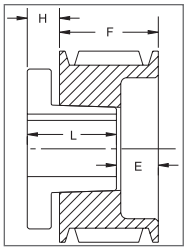

TYPE 11

"C" SECTION

DIMENSIONS 5 GROOVES

Datum dia.	O.D.	Part No	List Price $	F = 5 3/8 inches					
				H	Type	B	L	E	Wt
5.0	5.4	-	-	-	-	-	-	-	-
6.0	6.4	**5C60SF**	**172.00**	1/16	1B	SF	2	3 5/16	14.3
7.0	7.4	**5C70**	**176.00**	1 1/8	1B	SF	2	2 1/4	22.5
7.5	7.9	**5C75**	**224.00**	1 1/8	1B	SF	2	2 1/4	25.0
8.0	8.4	**5C80**	**236.00**	1 5/16	1B	E	2 5/8	1 7/16	27.3
8.5	8.9	**5C85**	**252.00**	1 5/16	1B	E	2 5/8	1 7/16	32.2
9.0	9.4	**5C90**	**256.00**	1 5/16	1B	E	2 5/8	1 7/16	35.9
9.5	9.9	**5C95**	**262.00**	1 5/16	1B	E	2 5/8	1 7/16	39.9
10.0	10.4	**5C100**	**276.00**	1 5/16	1W	E	2 5/8	1 7/16	41.6
10.5	10.9	**5C105**	**296.00**	1 5/16	1W	E	2 5/8	1 7/16	43.7
11.0	11.4	**5C110**	**332.00**	1 5/16	1W	E	2 5/8	1 7/16	48.7
12.0	12.4	**5C120**	**336.00**	1 5/16	1W	E	2 5/8	1 7/16	54.2
13.0	13.4	**5C130**	**376.00**	1 5/16	1A	E	2 5/8	1 7/16	53.6
14.0	14.4	**5C140**	**380.00**	1 5/16	1A	E	2 5/8	1 7/16	60.2
16.0	16.4	**5C160**	**430.00**	1 5/16	1A	E	2 5/8	1 7/16	72.2
18.0	18.4	**5C180**	**480.00**	1 5/16	1A	E	2 5/8	1 7/16	90.9
20.0	20.4	**5C200**	**600.00**	3/32	1A	F	3 5/8	1 21/32	109.7
24.0	24.4	**5C240**	**640.00**	3/32	1A	F	3 5/8	1 21/32	130.5
27.0	27.4	**5C270**	**760.00**	3/32	1A	F	3 5/8	1 21/32	149.0
30.0	30.4	**5C300**	**840.00**	3/32	1A	F	3 5/8	1 21/32	174.0
36.0	36.4	**5C360**	**1180.00**	7/32	1A	J	4 1/2	21/32	233.0
44.0	44.4	**5C440**	**1940.00**	7/32	1A	J	4 1/2	21/32	338.0
50.0	50.4	**5C500**	**2280.00**	7/32	1A	J	4 1/2	21/32	448.0

P.D. for "C" Belts = O.D.

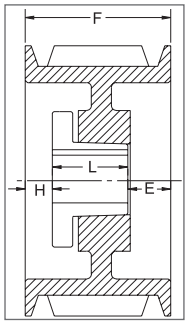

TYPE 1

"C" SECTION

DIMENSIONS 6 GROOVES

Datum dia.	O.D.	Part No	List Price $	F = 6 3/8 inches					
				H	Type	B	L	E	Wt
5.0	5.4	-	-	-	-	-	-	-	-
6.0	6.4	**6C60**	**244.00**	1 1/16	1B	SF	2	3 5/16	16.0
7.0	7.4	**6C70**	**248.00**	1 1/8	1B	SF	2	3 1/4	25.7
7.5	7.9	**6C75**	**264.00**	1 1/8	1B	SF	2	3 1/4	29.0
8.0	8.4	**6C80**	**280.00**	1 5/16	1B	E	2 5/8	2 7/16	30.3
8.5	8.9	**6C85**	**288.00**	1 5/16	1B	E	2 5/8	2 7/16	36.2
9.0	9.4	**6C90**	**296.00**	1 7/32	1B	F	3 5/8	1 17/32	44.1
9.5	9.9	**6C95**	**316.00**	1 7/32	1B	F	3 5/8	1 17/32	49.6
10.0	10.4	**6C100**	**328.00**	1 7/32	1B	F	3 5/8	1 17/32	55.3
10.5	10.9	**6C105**	**336.00**	1 7/32	1B	F	3 5/8	1 17/32	59.6
11.0	11.4	**6C110**	**356.00**	1 7/32	1W	F	3 5/8	1 17/32	61.4
12.0	12.4	**6C120**	**400.00**	1 7/32	1W	F	3 5/8	1 17/32	65.5
13.0	13.4	**6C130**	**444.00**	1 7/32	1A	F	3 5/8	1 17/32	68.1
14.0	14.4	**6C140**	**480.00**	1 7/32	1A	F	3 5/8	1 17/32	76.0
16.0	16.4	**6C160**	**520.00**	1 7/32	1A	F	3 5/8	1 17/32	84.6
18.0	18.4	**6C180**	**560.00**	1 7/32	1A	F	3 5/8	1 17/32	99.3
20.0	20.4	**6C200**	**620.00**	23/32	1A	F	3 5/8	2 1/32	119.2
24.0	24.4	**6C240**	**720.00**	23/32	1A	F	3 5/8	2 1/32	143.5
27.0	27.4	**6C270**	**880.00**	5/32	1A	J	4 1/2	1 23/32	175.5
30.0	30.4	**6C300**	**1040.00**	5/32	1A	J	4 1/2	1 23/32	205.0
36.0	36.4	**6C360**	**1300.00**	7/32	1A	J	4 1/2	1 21/32	303.0
44.0	44.4	**6C440**	**2040.00**	7/32	1A	J	4 1/2	1 21/32	410.0
50.0	50.4	**6C500**	**2680.00**	11/32	2A	M°	6 3/4	23/32	510.0

P.D. for "C" Belts = O.D.
°Note: M-N-P-W bushings are standard mounting only with these parts. See page 9 for installation instructions.

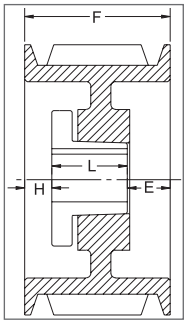

TYPE 1

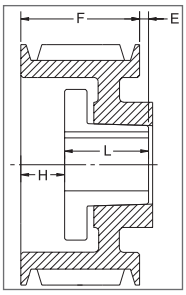

TYPE 2

"C" SECTION

DIMENSIONS 7 GROOVES

(Contact your sales representative for price & availability)

Datum dia.	O.D.	Part No	List Price $	F = 7 3/8 inches					
				H	Type	B	L	E	Wt
5.0	5.4	-	-	-	-	-	-	-	-
6.0	6.4	-	-	-	-	-	-	-	-
7.0	7.4	**7C70**	-	2 13/32	1B	SF	2	2 31/32	31.0
7.5	7.9	-	-	-	-	-	-	-	-
8.0	8.4	**7C80**	-	2 3/16	1B	E	2 5/8	2 9/16	35.3
8.5	8.9	**7C85**	-	2 3/16	1B	E	2 5/8	2 9/16	38.0
9.0	9.4	**7C90**	-	2 3/32	1B	F	3 5/8	1 21/32	47.0
9.5	9.9	**7C95**	-	2 3/32	1B	F	3 5/8	1 21/32	51.0
10.0	10.4	**7C100**	-	2 3/32	1B	F	3 5/8	1 21/32	58.0
10.5	10.9	**7C105**	-	2 3/32	1B	F	3 5/8	1 21/32	66.7
11.0	11.4	**7C110**	-	2 3/32	1B	F	3 5/8	1 21/32	74.0
12.0	12.4	**7C120**	-	2 3/32	1B	F	3 5/8	1 21/32	69.0
13.0	13.4	**7C130**	-	2 3/32	1W	F	3 5/8	1 21/32	91.0
14.0	14.4	**7C140**	-	2 3/32	1A	F	3 5/8	1 21/32	80.0
16.0	16.4	**7C160**	-	2 3/32	1A	F	3 5/8	1 21/32	106.0
18.0	18.4	**7C180**	-	2 3/32	1A	F	3 5/8	1 21/32	110.0
20.0	20.4	**7C200**	-	5/32	1A	J	4 1/2	2 23/32	133.0
24.0	24.4	**7C240**	-	5/32	1A	J	4 1/2	2 23/32	150.0
27.0	27.4	**7C270**	-	5/32	1A	J	4 1/2	2 23/32	211.3
30.0	30.4	**7C300**	-	5/32	1A	J	4 1/2	2 23/32	255.6
36.0	36.4	**7C360**	-	9/32	1A	M°	6 3/4	11/32	350.0
44.0	44.4	**7C440**	-	9/32	1A	M°	6 3/4	11/32	454.8
50.0	50.4	**7C500**	-	9/32	1A	M°	6 3/4	11/32	540.0

P.D. for "C" Belts = O.D.
°Note: M-N-P-W bushings are standard mounting only with these parts. See page 9 for installation instructions.

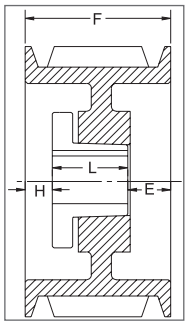

TYPE 1

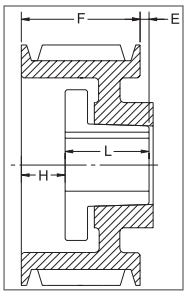

TYPE 2

"C" SECTION

DIMENSIONS 8 GROOVES

Datum dia.	O.D.	Part No	List Price $	F = 8 3/8 inches					
				H	Type	B	L	E	Wt
7.0	7.4	8C70	320.00	2 13/32	1B	SF	2	3 31/32	32.0
7.5	7.9	-	-	-	-	-	-	-	-
8.0	8.4	8C80	390.00	2 3/16	1B	E	2 5/8	3 9/16	39.1
8.5	8.9	8C85	400.00	2 3/16	1B	E	2 5/8	3 9/16	44.6
9.0	9.4	8C90	410.00	2 3/32	1B	F	3 5/8	2 21/32	52.7
9.5	9.9	8C95	420.00	2 3/32	1B	F	3 5/8	2 21/32	56.0
10.0	10.4	8C100	430.00	2 3/32	1B	F	3 5/8	2 21/32	64.0
10.5	10.9	8C105	450.00	2 3/32	1B	F	3 5/8	2 21/32	72.0
11.0	11.4	8C110	480.00	2 3/32	1B	F	3 5/8	2 21/32	79.4
12.0	12.4	8C120	520.00	2 3/32	1B	F	3 5/8	2 21/32	93.9
13.0	13.4	8C130	560.00	2 3/32	1W	F	3 5/8	2 21/32	96.9
14.0	14.4	8C140	650.00	2 3/32	1A	F	3 5/8	2 21/32	96.0
16.0	16.4	8C160	740.00	2 3/32	1A	F	3 5/8	2 21/32	111.0
18.0	18.4	8C180	860.00	2 3/32	1A	F	3 5/8	2 21/32	129.0
20.0	20.4	8C200	870.00	5/32	1A	J	4 1/2	3 23/32	158.0
24.0	24.4	8C240	1020.00	5/32	1A	J	4 1/2	3 23/32	173.0
27.0	27.4	8C270	1120.00	5/32	1A	J	4 1/2	3 23/32	226.0
30.0	30.4	8C300	1280.00	5/32	1A	J	4 1/2	3 23/32	272.0
36.0	36.4	8C360	1600.00	9/32	1A	M°	6 3/4	1 11/32	370.0
44.0	44.4	8C440	2560.00	9/32	1A	M°	6 3/4	1 11/32	479.0
50.0	50.4	8C500	3000.00	9/32	1A	M°	6 3/4	1 11/32	570.0

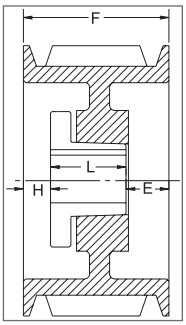

TYPE 1

DIMENSIONS 9 GROOVES (Contact your sales representative for price & availability)

Datum dia.	O.D.	Part No	List Price $	F = 9 3/8 inches					
				H	Type	B	L	E	Wt
8.0	8.4	9C80E	-	2 3/16	1B	E	2 5/8	4 9/16	37.0
8.5	8.9	9C85E	-	2 3/16	1B	E	2 5/8	4 9/16	47.7
9.0	9.4	9C90J	-	2 5/32	1B	J	4 1/2	2 23/32	49.0
9.5	9.9	9C95J	-	2 5/32	1B	J	4 1/2	2 23/32	61.0
10.0	10.4	9C100J	-	2 5/32	1B	J	4 1/2	2 23/32	65.0
10.5	10.9	9C105J	-	2 5/32	1B	J	4 1/2	2 23/32	74.0
11.0	11.4	9C110J	-	2 5/32	1B	J	4 1/2	2 23/32	87.9
12.0	12.4	9C120J	-	2 5/32	1B	J	4 1/2	2 23/32	89.0
13.0	13.4	9C130J	-	2 5/32	1W	J	4 1/2	2 23/32	118.6
14.0	14.4	9C140J	-	2 5/32	1W	J	4 1/2	2 23/32	110.0
16.0	16.4	9C160J	-	2 5/32	1A	J	4 1/2	2 23/32	135.0
18.0	18.4	9C180J	-	2 5/32	1A	J	4 1/2	2 23/32	142.0
20.0	20.4	9C200J	-	2 5/32	1A	J	4 1/2	2 23/32	160.0
24.0	24.4	9C240M	-	9/32	1A	M°	6 3/4	2 11/32	170.0
30.0	30.4	9C300M	-	9/32	1A	M°	6 3/4	2 11/32	260.0
36.0	36.4	9C360M	-	9/32	1A	M°	6 3/4	2 11/32	426.0
44.0	44.4	9C440M	-	9/32	1A	M°	6 3/4	2 11/32	520.0
50.0	50.4	9C500M	-	9/32	1A	M°	6 3/4	2 11/32	630.0

P.D. for "C" Belts = O.D.
°Note: M-N-P-W bushings are standard mounting only with these parts. See page 9 for installation instructions.

"C" SECTION

DIMENSIONS 10 GROOVES

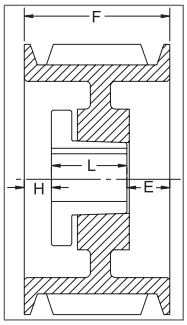

TYPE 1

Datum dia.	O.D.	Part No	List Price $	F = 10 3/8 inches					
				H	Type	B	L	E	Wt
8.0	8.4	**10C80**	**460.00**	2 3/16	1B	E	2 5/8	5 9/16	46.1
8.5	8.9	**10C85**	**480.00**	2 3/16	1B	E	2 5/8	5 9/16	51.7
9.0	9.4	**10C90**	**500.00**	2 5/32	1B	J	4 1/2	3 23/32	54.3
9.5	9.9	**10C95**	**510.00**	2 5/32	1B	J	4 1/2	3 23/32	67.4
10.0	10.4	**10C100**	**520.00**	2 5/32	1B	J	4 1/2	3 23/32	77.1
10.5	10.9	**10C105**	**580.00**	2 5/32	1B	J	4 1/2	3 23/32	85.7
11.0	11.4	**10C110**	**600.00**	2 5/32	1B	J	4 1/2	3 23/32	93.6
12.0	12.4	**10C120**	**760.00**	2 5/32	1B	J	4 1/2	3 23/32	111.9
13.0	13.4	**10C130**	**840.00**	2 5/32	1W	J	4 1/2	3 23/32	123.0
14.0	14.4	**10C140**	**900.00**	2 5/32	1W	J	4 1/2	3 23/32	144.1
16.0	16.4	**10C160**	**960.00**	2 5/32	1A	J	4 1/2	3 23/32	143.0
18.0	18.4	**10C180**	**1080.00**	2 5/32	1A	J	4 1/2	3 23/32	151.0
20.0	20.4	**10C200**	**1120.00**	2 5/32	1A	J	4 1/2	3 23/32	175.0
24.0	24.4	**10C240**	**1360.00**	9/32	1A	M°	6 3/4	3 11/32	225.0
30.0	30.4	**10C300**	**1760.00**	9/32	1A	M°	6 3/4	3 11/32	365.0
36.0	36.4	**10C360**	**2560.00**	9/32	1A	M°	6 3/4	3 11/32	446.0
44.0	44.4	**10C440**	**2800.00**	9/32	1A	M°	6 3/4	3 11/32	545.0
50.0	50.4	**10C500**	**3500.00**	9/32	1A	M°	6 3/4	3 11/32	660.0

DIMENSIONS 12 GROOVES

Datum dia.	O.D.	Part No	List Price $	F = 12 3/8 inches					
				H	Type	B	L	E	Wt
9.0	9.4	**12C90**	**700.00**	2 21/32	1B	J	4 1/2	5 7/32	62.0
9.5	9.9	**12C95**	**720.00**	2 21/32	1B	J	4 1/2	5 7/32	76.5
10.0	10.4	**12C100**	**740.00**	2 21/32	1B	J	4 1/2	5 7/32	86.7
10.5	10.9	**12C105**	**760.00**	2 21/32	1B	J	4 1/2	5 7/32	95.3
11.0	11.4	**12C110**	**780.00**	2 21/32	1B	J	4 1/2	5 7/32	105.0
12.0	12.4	**12C120**	**800.00**	2 21/32	1B	J	4 1/2	5 7/32	118.8
13.0	13.4	**12C130**	**920.00**	2 21/32	1W	J	4 1/2	5 7/32	145.6
14.0	14.4	**12C140**	**1180.00**	2 21/32	1W	J	4 1/2	5 7/32	167.6
16.0	16.4	**12C160**	**1360.00**	2 21/32	1A	J	4 1/2	5 7/32	151.0
18.0	18.4	**12C180**	**1400.00**	2 21/32	1A	J	4 1/2	5 7/32	175.5
20.0	20.4	**12C200**	**1480.00**	9/32	1A	M°	6 3/4	5 11/32	243.0
24.0	24.4	**12C240**	**1520.00**	9/32	1A	M°	6 3/4	5 11/32	304.5
30.0	30.4	**12C300**	**1780.00**	9/32	1A	M°	6 3/4	5 11/32	397.0
36.0	36.4	**12C360**	**2640.00**	9/32	1A	M°	6 3/4	5 11/32	502.0
44.0	44.4	**12C440**	**3200.00**	9/32	1A	M°	6 3/4	5 11/32	635.0
50.0	50.4	**12C500**	**3900.00**	9/32	1A	M°	6 3/4	5 11/32	807.0

P.D. for "C" Belts = O.D.
°Note: M-N-P-W bushings are standard mounting only with these parts. See page 9 for installation instructions.

"D" SECTION

DIMENSIONS 3 GROOVES

Datum dia.	O.D.	Part No	List Price $	F = 4 5/8 inches					
				H	Type	B	L	E	Wt
12.0	12.6	**3D120**	**560.00**	9/32	1W	F	3 5/8	23/32	64.0
13.0	13.6	**3D130**	**600.00**	9/32	1W	F	3 5/8	23/32	72.0
13.5	14.1	**3D135**	**620.00**	9/32	1W	F	3 5/8	23/32	76.0
14.0	14.6	**3D140**	**640.00**	9/32	1W	F	3 5/8	23/32	79.0
14.5	15.1	**3D145**	**680.00**	9/32	1W	F	3 5/8	23/32	84.0
15.0	15.6	**3D150**	**720.00**	9/32	1W	F	3 5/8	23/32	89.0
15.5	16.1	**3D155**	**740.00**	9/32	1W	F	3 5/8	23/32	94.0
16.0	16.6	**3D160**	**760.00**	9/32	1A	F	3 5/8	23/32	96.0
17.0	17.6	**-**	**-**	-	-	-	-	-	-
18.0	18.6	**3D180**	**800.00**	7/32	6A	J	4 1/2	11/32	115.0
20.0	20.6	**-**	**-**	-	-	-	-	-	-
22.0	22.6	**3D220**	**960.00**	7/32	6A	J	4 1/2	11/32	141.0
27.0	27.6	**3D270**	**1160.00**	7/32	6A	J	4 1/2	11/32	211.0
33.0	33.6	**3D330**	**1640.00**	7/32	6A	J	4 1/2	11/32	231.0
40.0	40.6	**3D400**	**2040.00**	7/32	6A	J	4 1/2	11/32	310.0

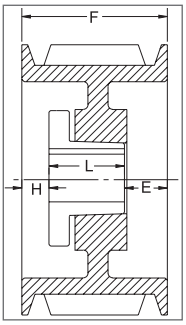

TYPE 1

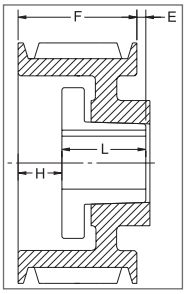

TYPE 2

DIMENSIONS 4 GROOVES

Datum dia.	O.D.	Part No	List Price $	F = 6 1/16 inches					
				H	Type	B	L	E	Wt
12.0	12.6	**4D120**	**600.00**	1 3/32	1W	F	3 5/8	1 11/32	77.0
13.0	13.6	**4D130**	**640.00**	1 3/32	1W	F	3 5/8	1 11/32	85.0
13.5	14.1	**4D135**	**660.00**	1 3/32	1W	F	3 5/8	1 11/32	90.0
14.0	14.6	**4D140**	**680.00**	1 3/32	1W	F	3 5/8	1 11/32	95.0
14.5	15.1	**4D145**	**780.00**	1 3/32	1W	F	3 5/8	1 11/32	100.0
15.0	15.6	**4D150**	**800.00**	1 3/32	1W	F	3 5/8	1 11/32	107.0
15.5	16.1	**4D155**	**820.00**	1 3/32	1W	F	3 5/8	1 11/32	112.0
16.0	16.6	**4D160**	**840.00**	1 3/32	1A	F	3 5/8	1 11/32	119.0
17.0	17.6	**4D170**	**940.00**	1 5/32	1A	J	4 1/2	13/32	127.0
18.0	18.6	**4D180**	**960.00**	1 5/32	1A	J	4 1/2	13/32	131.0
20.0	20.6	**4D200**	**980.00**	1 5/32	1A	J	4 1/2	13/32	147.0
22.0	22.6	**4D220**	**1000.00**	5/32	1A	J	4 1/2	1 13/32	166.5
27.0	27.6	**4D270**	**1280.00**	5/32	1A	J	4 1/2	1 13/32	238.0
33.0	33.6	**4D330**	**2120.00**	9/32	2A	M°	6 3/4	31/32	308.0
40.0	40.6	**4D400**	**2240.00**	9/32	2A	M°	6 3/4	31/32	385.0

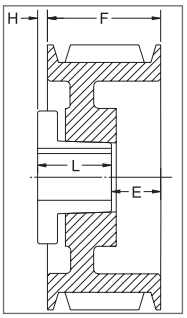

TYPE 6

P.D. for "D" Belts = O.D.
°Note: M-N-P-W bushings are standard mounting only with these parts. See page 9 for installation instructions.

"D" SECTION

DIMENSIONS 5 GROOVES

Datum dia.	O.D.	Part No	List Price $	F = 7 1/2 inches					
				H	Type	B	L	E	Wt
12.0	12.6	**5D120**	**780.00**	1 27/32	1W	F	3 5/8	2 1/32	89.0
13.0	13.6	**5D130**	**800.00**	1 27/32	1W	F	3 5/8	2 1/32	100.0
13.5	14.1	**5D135**	**820.00**	1 27/32	1W	F	3 5/8	2 1/32	105.0
14.0	14.6	**5D140**	**860.00**	1 27/32	1W	F	3 5/8	2 1/32	111.0
14.5	15.1	**5D145**	**920.00**	1 27/32	1W	F	3 5/8	2 1/32	118.0
15.0	15.6	**5D150**	**940.00**	1 27/32	1W	F	3 5/8	2 1/32	125.0
15.5	16.1	**5D155**	**960.00**	1 27/32	1W	F	3 5/8	2 1/32	131.0
16.0	16.6	**5D160**	**980.00**	1 27/32	1A	F	3 5/8	2 1/32	131.4
17.0	17.6	**5D170**	**1000.00**	1 29/32	1A	J	4 1/2	1 3/32	120.0
18.0	18.6	**5D180**	**1020.00**	1 29/32	1A	J	4 1/2	1 3/32	151.0
20.0	20.6	**5D200**	**1220.00**	5/32	1A	J	4 1/2	2 27/32	167.0
22.0	22.6	**5D220**	**1420.00**	5/32	1A	J	4 1/2	2 27/32	198.0
27.0	27.6	**5D270**	**1740.00**	9/32	1A	M°	6 3/4	15/32	289.0
33.0	33.6	**5D330**	**2180.00**	9/32	1A	M°	6 3/4	15/32	372.5
40.0	40.6	**5D400**	**2700.00**	9/32	1A	M°	6 3/4	15/32	521.0
48.0	48.6	**5D480**	**3080.00**	9/32	1A	M°	6 3/4	15/32	598.0
58.0	58.6	**5D580**	**4280.00**	9/32	1A	M°	6 3/4	15/32	817.0

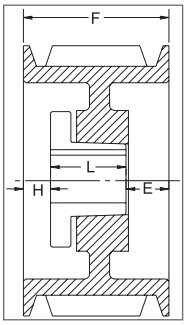

TYPE 1

DIMENSIONS 6 GROOVES

Datum dia.	O.D.	Part No	List Price $	F = 8 15/16 inches					
				H	Type	B	L	E	Wt
12.0	12.6	**6D120**	**960.00**	1 29/32	1B	J	4 1/2	2 17/32	116.0
13.0	13.6	**6D130**	**980.00**	1 29/32	1B	J	4 1/2	2 17/32	137.0
13.5	14.1	**6D135**	**1000.00**	1 29/32	1B	J	4 1/2	2 17/32	147.0
14.0	14.6	**6D140**	**1020.00**	1 29/32	1B	J	4 1/2	2 17/32	158.0
14.5	15.1	**6D145**	**1040.00**	1 29/32	1B	J	4 1/2	2 17/32	170.0
15.0	15.6	**6D150**	**1060.00**	1 29/32	1W	J	4 1/2	2 17/32	147.0
15.5	16.1	**6D155**	**1080.00**	1 29/32	1W	J	4 1/2	2 17/32	153.0
16.0	16.6	**6D160**	**1100.00**	1 29/32	1A	J	4 1/2	2 17/32	137.0
17.0	17.6	**6D170**	**1120.00**	1 29/32	1A	J	4 1/2	2 17/32	153.0
18.0	18.6	**6D180**	**1140.00**	1 29/32	1A	J	4 1/2	2 17/32	167.0
20.0	20.6	**6D200**	**1480.00**	1 29/32	1A	J	4 1/2	2 17/32	195.5
22.0	22.6	**6D220**	**1840.00**	9/32	1A	M°	6 3/4	1 29/32	269.0
27.0	27.6	**6D270**	**1900.00**	9/32	1A	M°	6 3/4	1 29/32	300.0
33.0	33.6	**6D330**	**2460.00**	9/32	1A	M°	6 3/4	1 29/32	408.0
40.0	40.6	**6D400**	**2980.00**	9/32	1A	M°	6 3/4	1 29/32	557.0
48.0	48.6	**6D480**	**3480.00**	9/32	1A	M°	6 3/4	1 29/32	664.0
58.0	58.6	**6D580**	**4520.00**	3/16	1A	N°	8 1/8	5/8	925.0

P.D. for "D" Belts = O.D.
°Note: M-N-P-W bushings are standard mounting only with these parts. See page 9 for installation instructions.

"D" SECTION

DIMENSIONS 8 GROOVES

Datum dia.	O.D.	Part No	List Price $	F = 11 13/16 inches					
				H	Type	B	L	E	Wt
12.0	12.6	**8D120**	**1240.00**	2 5/32	1B	J	4 1/2	5 5/32	141.0
13.0	13.6	**8D130**	**1260.00**	2 5/32	1B	J	4 1/2	5 5/32	163.0
13.5	14.1	**8D135**	**1280.00**	2 5/32	1B	J	4 1/2	5 5/32	175.0
14.0	14.6	**8D140**	**1320.00**	2 5/32	1B	J	4 1/2	5 5/32	187.0
14.5	15.1	**8D145**	**1360.00**	2 5/32	1B	J	4 1/2	5 5/32	200.0
15.0	15.6	**8D150**	**1380.00**	2 5/32	1W	J	4 1/2	5 5/32	183.0
15.5	16.1	**8D155**	**1400.00**	2 5/32	1W	J	4 1/2	5 5/32	189.0
16.0	16.6	**8D160**	**1560.00**	2 5/32	1W	J	4 1/2	5 5/32	197.0
17.0	17.6	**8D170**	**1680.00**	2 5/32	1W	J	4 1/2	5 5/32	213.0
18.0	18.6	**8D180**	**1820.00**	2 9/32	1W	Mº	6 3/4	2 25/32	255.0
20.0	20.6	**8D200**	**2000.00**	2 9/32	1W	Mº	6 3/4	2 25/32	258.0
22.0	22.6	**8D220**	**2160.00**	9/32	1A	Mº	6 3/4	4 25/32	329.0
27.0	27.6	**8D270**	**2660.00**	9/32	1A	Mº	6 3/4	4 25/32	409.0
33.0	33.6	**8D330**	**2840.00**	9/32	1A	Mº	6 3/4	4 25/32	531.0
40.0	40.6	**8D400**	**3720.00**	1/8	1A	Nº	8 1/8	3 9/16	731.0
48.0	48.6	**8D480**	**4320.00**	1/8	1A	Nº	8 1/8	3 9/16	871.0
58.0	58.6	**8D580**	**5280.00**	1/8	1A	Nº	8 1/8	3 9/16	950.0

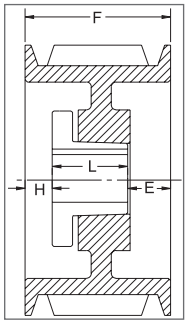

TYPE 1

P.D. for "D" Belts = O.D.
ºNote: M-N-P-W bushings are standard mounting only with these parts. See page 9 for installation instructions.

SHEAVES

"D" SECTION

DIMENSIONS 10 GROOVES

Datum dia.	O.D.	Part No	List Price $	F = 14 11/16 inches					
				H	Type	B	L	E	Wt
12.0	12.6	**10D120**	**1520.00**	2 9/32	1B	M°	6 3/4	5 21/32	166.0
13.0	13.6	**10D130**	**1580.00**	2 9/32	1B	M°	6 3/4	5 21/32	207.0
13.5	14.1	**10D135**	**1660.00**	2 9/32	1B	M°	6 3/4	5 21/32	224.0
14.0	14.6	**10D140**	**1740.00**	2 9/32	1B	M°	6 3/4	5 21/32	242.0
14.5	15.1	**10D145**	**1840.00**	2 9/32	1B	M°	6 3/4	5 21/32	260.0
15.0	15.6	**10D150**	**1860.00**	2 9/32	1B	M°	6 3/4	5 21/32	279.0
15.5	16.1	**10D155**	**1880.00**	2 9/32	1B	M°	6 3/4	5 21/32	298.0
16.0	16.6	**10D160**	**1900.00**	2 9/32	1B	M°	6 3/4	5 21/32	318.0
17.0	17.6	**10D170**	**2080.00**	2 9/32	1W	M°	6 3/4	5 21/32	307.0
18.0	18.6	**10D180**	**2120.00**	2 9/32	1W	M°	6 3/4	5 21/32	293.0
20.0	20.6	**10D200**	**2380.00**	2 9/32	1W	M°	6 3/4	5 21/32	351.0
22.0	22.6	**10D220**	**2480.00**	1 9/32	1A	M°	6 3/4	6 21/32	390.0
27.0	27.6	**10D270**	**2980.00**	1 9/32	1A	M°	6 3/4	6 21/32	497.0
33.0	33.6	**10D330**	**3280.00**	1 11/32	1A	N°	8 1/8	5 7/32	672.0
40.0	40.6	**10D400**	**4300.00**	1 11/32	1A	N°	8 1/8	5 7/32	857.0
48.0	48.6	**10D480**	**5080.00**	3/16	1A	P°	9 3/8	5 1/8	1150.0
58.0	58.6	**10D580**	**5880.00**	3/16	1A	P°	9 3/8	5 1/8	1570.0

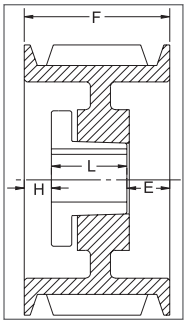

TYPE 1

DIMENSIONS 12 GROOVES

Datum dia.	O.D.	Part No	List Price $	F = 17 9/16 inches					
				H	Type	B	L	E	Wt
12.0	12.6	**12D120**	**1720.00**	3 9/32	1B	M°	6 3/4	7 17/32	187.0
13.0	13.6	**12D130**	**1800.00**	3 9/32	1B	M°	6 3/4	7 17/32	234.0
13.5	14.1	**12D135**	**1860.00**	3 9/32	1B	M°	6 3/4	7 17/32	252.0
14.0	14.6	**12D140**	**1880.00**	3 9/32	1B	M°	6 3/4	7 17/32	271.0
14.5	15.1	**12D145**	**2000.00**	3 9/32	1B	M°	6 3/4	7 17/32	290.0
15.0	15.6	**12D150**	**2120.00**	3 9/32	1B	M°	6 3/4	7 17/32	310.0
15.5	16.1	**12D155**	**2180.00**	3 9/32	1B	M°	6 3/4	7 17/32	330.0
16.0	16.6	**12D160**	**2200.00**	3 9/32	1B	M°	6 3/4	7 17/32	352.0
17.0	17.6	**12D170**	**2320.00**	3 15/32	1W	M°	6 3/4	7 11/32	365.0
18.0	18.6	**12D180**	**2420.00**	3 15/32	1W	M°	6 3/4	7 11/32	391.0
20.0	20.6	**12D200**	**2760.00**	3 9/32	1W	M°	6 3/4	7 17/32	401.0
22.0	22.6	**12D220**	**2980.00**	2 9/32	1A	M°	6 3/4	7 17/32	365.0
27.0	27.6	**12D270**	**3640.00**	2 1/8	1A	N°	8 1/8	7 5/16	505.0
33.0	33.6	**12D330**	**4380.00**	2 1/8	1A	N°	8 1/8	7 5/16	740.0
40.0	40.6	**12D400**	**5040.00**	3/16	1A	P°	9 3/8	8	1010.0
48.0	48.6	**12D480**	**6180.00**	3/16	1A	P°	9 3/8	8	1237.0
58.0	58.6	**12D580**	**6760.00**	3/16	1A	P°	9 3/8	8	1693.0

P.D. for "D" Belts = O.D.
°Note: M-N-P-W bushings are standard mounting only with these parts. See page 9 for installation instructions.

NARROW 3V, 5V & 8V

1 For mounting instructions with QD bushings, see page 9.

2 All Charts: The type of sheave construction is indicated in the column entitled « T ». The number refers to the drawing and the letter as follows: A = arms; B = block; W = web.

3 "B" Column indicates the corresponding bushing size required.

4 All dimensions are to the closest fraction.

NEW
5V groove sizes

DID YOU KNOW THAT...

- Complete line in stock, including larger models
- Higher HP than classical model; compact, light-weight drives
- Designed for use with QD bushing
- 3V model from 1-6;8;10 grooves, 2.2"-33.5" O.D.
- 5V model from 2-10 grooves, 4.4"-50" O.D.
- 8V model from 4-6;8;10;12 grooves, 12.5"- 71" O.D.

HOW TO ORDER

EXAMPLE: **5-5V11.30**

5	5V	11.30

5: NUMBER OF GROOVES

5V: SHEAVE SECTION ("5V")

11.30: OUTSIDE DIAMETER (11.30")

IMPORTANT REMINDER

• DO NOT use these gray cast iron sheaves with rim speeds in excess of 6500 feet per minute. Note that the max. RPM indicated on the arm of the sheave is based on the 6500 ft/min. limit, and doesn't take into consideration the need for dynamic balancing (two planes). Please refer to the chart on page 30 to verify the validity of dynamic balancing in your application.

All operational PT products when used in a drive are potentially dangerous and must be guarded by the user as required by applicable laws, regulations, standards and good safety practice. (Refer to ANSI Standard B15.1)

- **When ordering a sheave to be dynamically balanced, you must specify the sheave operational speed. Baldor recommends ordering the matching bushing with the sheave to ensure a balancing grade of 6.3. If the bushing is not ordered at the same time, a disclaimer will be sent to the customer discharging Baldor from possible vibration problems related to the drive.**

3V SECTION

DIMENSIONS 1 GROOVE

O.D.	Datum dia.	Part No	List Price $	F = 11/16 up to 10.60 O.D. incl. and 13/16 inch thereafter					
				H	Type	B	L	E	Wt
2.20	2.15	**1-3V2.20[1]***	**20.00**	1 1/64	10B	JA	1	45/64	0.8
2.35	2.30	**1-3V2.35[1]***	**20.80**	1 1/64	10B	JA	1	45/64	0.85
2.50	2.45	**1-3V2.50[1]***	**21.60**	1 1/64	10B	JA	1	45/64	0.92
2.65	2.60	**1-3V2.65**	**22.40**	29/64	6B	JA	1	9/64	0.5
2.80	2.75	**1-3V2.80**	**23.20**	29/64	6B	JA	1	9/64	0.7
3.00	2.95	**1-3V3.00**	**24.00**	29/64	6B	JA	1	9/64	0.7
3.15	3.10	**1-3V3.15**	**25.20**	29/64	6B	JA	1	9/64	0.7
3.35	3.30	**1-3V3.35**	**26.40**	29/64	6B	JA	1	9/64	1.1
3.65	3.60	**1-3V3.65**	**27.60**	5/8	11B	SH	1 1/4	1/16	1.3
4.12	4.07	**1-3V4.12**	**28.80**	5/8	11B	SH	1 1/4	1/16	1.8
4.50	4.45	**1-3V4.50**	**30.00**	5/8	11B	SH	1 1/4	1/16	2.3
4.75	4.70	**1-3V4.75**	**32.00**	5/8	11B	SH	1 1/4	1/16	2.6
5.00	4.95	**1-3V5.00**	**34.00**	5/8	11B	SH	1 1/4	1/16	2.9
5.30	5.25	**1-3V5.30**	**36.00**	5/8	11B	SH	1 1/4	1/16	3.3
5.60	5.55	**1-3V5.60**	**38.00**	5/8	11B	SH	1 1/4	1/16	3.7
6.00	5.95	**1-3V6.00**	**40.00**	5/8	11W	SH	1 1/4	1/16	4.0
6.50	6.45	**1-3V6.50**	**44.00**	5/8	11W	SH	1 1/4	1/16	4.8
6.90	6.85	**1-3V6.90**	**52.00**	5/8	11W	SH	1 1/4	1/16	5.5
8.00	7.95	**1-3V8.00**	**60.00**	11/16	11A	SDS	1 5/16	1/16	5.7
10.60	10.55	**1-3V10.60**	**100.00**	11/16	11A	SDS	1 5/16	1/16	8.7
14.00	13.95	**1-3V14.00**	**120.00**	13/16	5A	SK	1 7/8	1/4	16.0
19.00	18.95	**1-3V19.00**	**200.00**	29/32	3A	SK	1 7/8	5/32	23.9

P.D. for "3V" Belts = O.D.
[1] Reverse mount only.
* Mounting bolts are supplied by Baldor with this sheave.

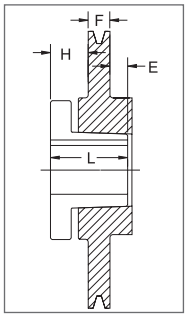

TYPE 3

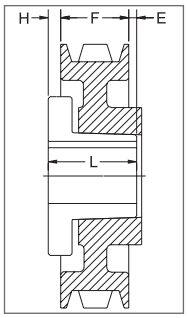

TYPE 5

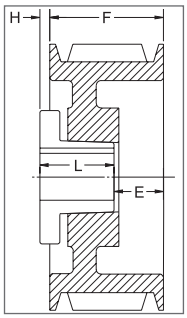

TYPE 6

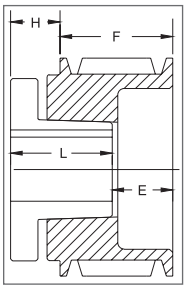

TYPE 10

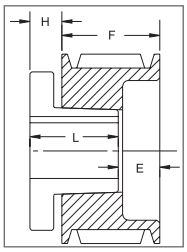

TYPE 11

3V SECTION

DIMENSIONS 2 GROOVES

O.D.	Datum dia.	Part No	List Price $	F = 1 3/32 inches					
				H	Type	B	L	E	Wt
2.20	2.15	**2-3V2.20[1]***	**28.80**	1 1/64	10B	JA	1	1 7/64	0.9
2.35	2.30	**2-3V2.35[1]***	**29.60**	1 1/64	10B	JA	1	1 7/64	1.0
2.50	2.45	**2-3V2.50[1]***	**30.40**	1 1/64	10B	JA	1	1 7/64	1.1
2.65	2.60	**2-3V2.65[2]**	**31.20**	25/64	6B	JA	1	31/64	0.8
2.80	2.75	**2-3V2.80[2]**	**32.00**	25/64	6B	JA	1	31/64	1.0
3.00	2.95	**2-3V3.00[2]**	**32.80**	25/64	6B	JA	1	31/64	1.2
3.15	3.10	**2-3V3.15[2]**	**34.00**	25/64	6B	JA	1	31/64	1.2
3.35	3.30	**2-3V3.35[2]**	**35.20**	1/2	6B	SH	1 1/4	11/32	1.4
3.65	3.60	**2-3V3.65[2]**	**36.40**	1/2	6B	SH	1 1/4	11/32	1.7
4.12	4.07	**2-3V4.12**	**40.00**	9/32	6B	SH	1 1/4	1/8	2.3
4.50	4.45	**2-3V4.50**	**44.00**	9/32	6B	SH	1 1/4	1/8	2.9
4.75	4.70	**2-3V4.75**	**48.00**	9/32	6B	SH	1 1/4	1/8	3.3
5.00	4.95	**2-3V5.00**	**52.00**	9/32	6B	SH	1 1/4	1/8	3.7
5.30	5.25	**2-3V5.30**	**54.00**	9/32	6B	SH	1 1/4	1/8	4.2
5.60	5.55	**2-3V5.60**	**56.00**	9/32	6B	SH	1 1/4	1/8	4.7
6.00	5.95	**2-3V6.00**	**58.00**	9/32	6W	SH	1 1/4	1/8	5.1
6.50	6.45	**2-3V6.50**	**64.00**	3/8	6W	SDS	1 5/16	5/32	5.7
6.90	6.85	**2-3V6.90**	**70.00**	3/8	6W	SDS	1 5/16	5/32	6.5
8.00	7.95	**2-3V8.00**	**72.00**	3/8	6A	SDS	1 5/16	5/32	6.5
10.60	10.55	**2-3V10.60**	**110.00**	5/8	5A	SK	1 7/8	5/32	11.7
14.00	13.95	**2-3V14.00**	**174.00**	5/8	5A	SK	1 7/8	5/32	17.6
19.00	18.95	**2-3V19.00**	**204.00**	13/16	11A	SK	1 7/8	1/32	26.3
25.00	24.95	**2-3V25.00**	**360.00**	13/16	5A	SF	2	3/32	34.5

P.D. for "3V" Belts = O.D.
[1] Reverse mount only.
[2] This sheave can only be reverse mounted with standard bushing bolts. Specials bolts (not provided by Baldor) are required for standard mount. (see page 9)
* Mounting bolts are supplied by Baldor with this sheave.

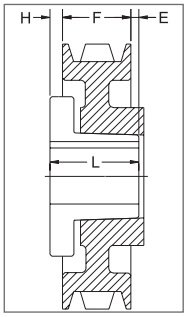

TYPE 5

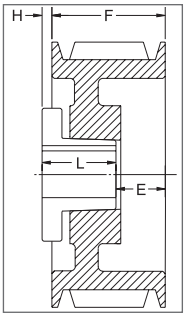

TYPE 6

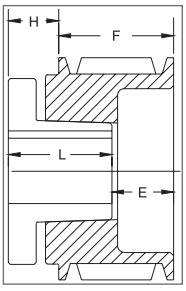

TYPE 10

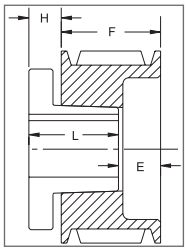

TYPE 11

3V SECTION

DIMENSIONS 3 GROOVES

O.D.	Datum dia.	Part No	List Price $	F = 1 1/2 inches					
				H	Type	B	L	E	Wt
2.65	2.60	**3-3V2.65[2]**	**36.80**	25/64	6B	JA	1	57/64	1.0
2.80	2.75	**3-3V2.80[2]**	**37.60**	25/64	6B	JA	1	57/64	1.3
3.00	2.95	**+3-3V3.00[1]***	**38.80**	1 1/32	10B	SH	1 1/4	1 9/32	1.8
3.15	3.10	**+3-3V3.15[1]***	**40.00**	1	10B	SH	1 1/4	1 1/4	2.0
3.35	3.30	**3-3V3.35[2]**	**41.20**	9/16	6B	SH	1 1/4	13/16	1.7
3.65	3.60	**3-3V3.65[2]**	**42.40**	9/16	6B	SH	1 1/4	13/16	2.3
4.12	4.07	**3-3V4.12**	**44.00**	0	4B	SH	1 1/4	1/4	2.6
4.50	4.45	**3-3V4.50**	**50.00**	0	4B	SDS	1 5/16	3/16	3.1
4.75	4.70	**3-3V4.75**	**54.00**	0	4B	SDS	1 5/16	3/16	3.6
5.00	4.95	**3-3V5.00**	**58.00**	0	4B	SDS	1 5/16	3/16	4.2
5.30	5.25	**3-3V5.30**	**60.00**	0	4B	SDS	1 5/16	3/16	4.8
5.60	5.55	**3-3V5.60**	**62.00**	0	4B	SDS	1 5/16	3/16	5.3
6.00	5.95	**3-3V6.00**	**66.00**	0	4B	SDS	1 5/16	3/16	6.2
6.50	6.45	**3-3V6.50**	**68.00**	0	4W	SDS	1 5/16	3/16	6.6
6.90	6.85	**3-3V6.90**	**80.00**	0	4W	SDS	1 5/16	3/16	7.3
8.00	7.95	**3-3V8.00**	**86.00**	5/8	6A	SK	1 7/8	1/4	9.8
10.60	10.55	**3-3V10.60**	**126.00**	5/8	6A	SK	1 7/8	1/4	14.1
14.00	13.95	**3-3V14.00**	**184.00**	5/8	6A	SK	1 7/8	1/4	18.9
19.00	18.95	**3-3V19.00**	**216.00**	13/16	11A	SF	2	5/16	34.1
25.00	24.95	**3-3V25.00**	**400.00**	13/16	11A	SF	2	5/16	38.6
33.50	33.45	**3-3V33.50**	**720.00**	23/32	6A	SF	2	7/32	79.4

P.D. for "3V" Belts = O.D. + For 3-3V3.00: F=1.912" + For 3-3V3.15: F=1 7/8"

[1] Reverse mount only.

[2] This sheave can only be reverse mounted with standard bushing bolts. Specials bolts (not provided by Baldor) are required for standard mount. (see page 9)

* Mounting bolts are supplied by Baldor with this sheave.

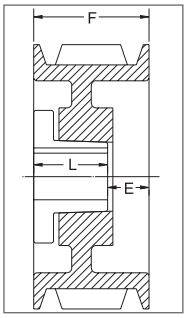

TYPE 4

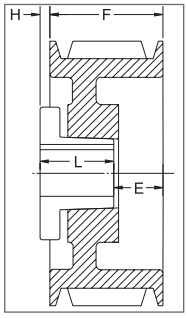

TYPE 6

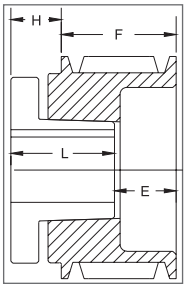

TYPE 10

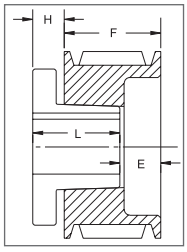

TYPE 11

SHEAVES

3V SECTION

DIMENSIONS 4 GROOVES

O.D.	Datum dia.	Part No	List Price $	F = 1 29/32 inches					
				H	Type	B	L	E	Wt
2.65	2.60	**4-3V2.65[2]**	**42.40**	25/64	6B	JA	1	1 19/64	1.3
2.80	2.75	**4-3V2.80[2]**	**42.80**	25/64	6B	JA	1	1 19/64	1.6
3.00	2.95	**4-3V3.00[1]***	**43.20**	1 1/32	10B	SH	1 1/4	1 11/16	2.1
3.15	3.10	**4-3V3.15[1]***	**44.80**	1	10B	SH	1 1/4	1 21/32	2.4
3.35	3.30	**4-3V3.35[2]**	**46.40**	1/2	6B	SH	1 1/4	1 5/32	2.1
3.65	3.60	**4-3V3.65[2]**	**48.00**	1/2	6B	SH	1 1/4	1 5/32	2.9
4.12	4.07	**4-3V4.12**	**50.00**	3/16	1B	SH	1 1/4	15/32	3.0
4.50	4.45	**4-3V4.50**	**52.00**	3/16	1B	SDS	1 5/16	13/32	3.5
4.75	4.70	**4-3V4.75**	**56.00**	1/8	1B	SDS	1 5/16	15/32	4.2
5.00	4.95	**4-3V5.00**	**60.00**	1/8	1B	SDS	1 5/16	15/32	5.0
5.30	5.25	**4-3V5.30**	**64.00**	1/8	1B	SDS	1 5/16	15/32	5.6
5.60	5.55	**4-3V5.60**	**66.00**	1/8	1B	SDS	1 5/16	15/32	6.3
6.00	5.95	**4-3V6.00**	**70.00**	1/4	6B	SK	1 7/8	9/32	7.8
6.50	6.45	**4-3V6.50**	**72.00**	1/4	6B	SK	1 7/8	9/32	9.5
6.90	6.85	**4-3V6.90**	**82.00**	1/4	6B	SK	1 7/8	9/32	11.1
8.00	7.95	**4-3V8.00**	**88.00**	1/4	6A	SK	1 7/8	9/32	11.3
10.60	10.55	**4-3V10.60**	**128.00**	1/4	6A	SK	1 7/8	9/32	15.9
14.00	13.95	**4-3V14.00**	**196.00**	1/4	6A	SK	1 7/8	9/32	24.5
19.00	18.95	**4-3V19.00**	**252.00**	1/16	5A	SF	2	1/32	41.2
25.00	24.95	**4-3V25.00**	**412.00**	7/16	6A	SF	2	11/32	51.1
33.50	33.45	**4-3V33.50**	**780.00**	25/32	6A	E	2 5/8	1/16	94.1

P.D. for "3V" Belts = O.D.
[1] Reverse mount only.
[2] This sheave can only be reverse mounted with standard bushing bolts. Specials bolts (not provided by Baldor) are required for standard mount. (see page 9)
* Mounting bolts are supplied by Baldor with this sheave.

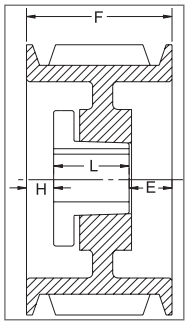

TYPE 1

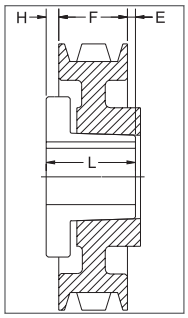

TYPE 5

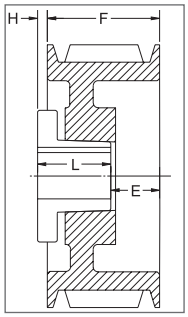

TYPE 6

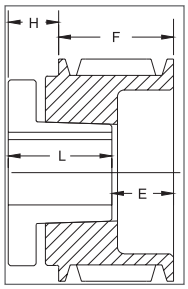

TYPE 10

3V SECTION

DIMENSIONS 5 GROOVES

O.D.	Datum dia.	Part No	List Price $	F = 2 5/16 inches					
				H	Type	B	L	E	Wt
4.75	4.70	**5-3V4.75**	**62.00**	1/8	1B	SDS	1 5/16	7/8	4.8
5.00	4.95	**5-3V5.00**	**68.00**	1/8	1B	SDS	1 5/16	7/8	5.9
5.30	5.25	**5-3V5.30**	**70.00**	1/16	1B	SK	1 7/8	3/8	6.0
5.60	5.55	**5-3V5.60**	**76.00**	1/32	1B	SK	1 7/8	13/32	7.4
6.00	5.95	**5-3V6.00**	**78.00**	1/16	1B	SK	1 7/8	3/8	8.7
6.50	6.45	**5-3V6.50**	**80.00**	1/16	1B	SK	1 7/8	3/8	10.7
6.90	6.85	**5-3V6.90**	**88.00**	1/32	1B	SK	1 7/8	13/32	12.1
8.00	7.95	**5-3V8.00**	**94.00**	1/16	1W	SK	1 7/8	3/8	14.8
10.60	10.55	**5-3V10.60**	**130.00**	5/32	1A	SK	1 7/8	9/32	19.3
14.00	13.95	**5-3V14.00**	**232.00**	3/32	6A	SF	2	13/32	27.8
19.00	18.95	**5-3V19.00**	**292.00**	3/32	1A	SF	2	7/32	42.9
25.00	24.95	**5-3V25.00**	**436.00**	7/16	6A	E	2 5/8	1/8	61.4
33.50	33.45	**5-3V33.50**	**850.00**	3/8	6A	E	2 5/8	1/16	107.0

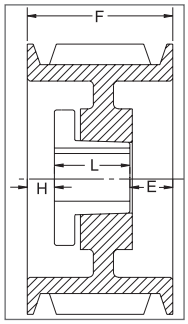

TYPE 1

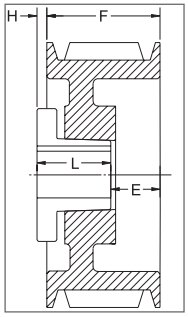

TYPE 6

DIMENSIONS 6 GROOVES

O.D.	Datum dia.	Part No	List Price $	F = 2 23/32 inches					
				H	Type	B	L	E	Wt
4.75	4.70	**6-3V4.75[1]***	**84.00**	13/16	11B	SK	1 7/8	1 21/32	5.9
5.00	4.95	**6-3V5.00[1]**	**86.00**	13/16	11B	SK	1 7/8	1 21/32	7.2
5.30	5.25	**6-3V5.30**	**88.00**	15/32	1B	SK	1 7/8	3/8	6.5
5.60	5.55	**6-3V5.60**	**90.00**	7/16	1B	SK	1 7/8	13/32	8.3
6.00	5.95	**6-3V6.00**	**92.00**	7/16	1B	SK	1 7/8	13/32	9.7
6.50	6.45	**6-3V6.50**	**94.00**	1/2	1B	SK	1 7/8	11/32	11.6
6.90	6.85	**6-3V6.90**	**112.00**	7/16	1B	SK	1 7/8	13/32	13.2
8.00	7.95	**6-3V8.00**	**124.00**	1/16	1W	SK	1 7/8	25/32	16.2
10.60	10.55	**6-3V10.60**	**144.00**	5/32	1A	SF	2	9/16	22.1
14.00	13.95	**6-3V14.00**	**248.00**	3/32	1A	SF	2	5/8	32.4
19.00	18.95	**6-3V19.00**	**308.00**	1/32	6A	E	2 5/8	1/8	47.5
25.00	24.95	**6-3V25.00**	**452.00**	1/32	6A	E	2 5/8	1/8	75.0
33.50	33.45	**6-3V33.50**	**900.00**	1/32	1A	E	2 5/8	1/16	122.5

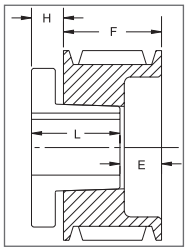

TYPE 11

P.D. for "3V" Belts = O.D.
[1] Reverse mount only.
* Mounting bolts are supplied by Baldor with this sheave .

3V SECTION

DIMENSIONS 8 GROOVES

O.D.	Datum dia.	Part No	List Price $	F = 3 17/32 inches					
				H	Type	B	L	E	Wt
4.75	4.70	**8-3V4.75**[1]	**106.00**	13/16	11B	SK	1 7/8	2 15/32	7.2
5.00	4.95	**8-3V5.00**[1]	**110.00**	13/16	11B	SK	1 7/8	2 15/32	8.9
5.30	5.25	**8-3V5.30**	**124.00**	7/16	1B	SK	1 7/8	1 7/32	7.7
5.60	5.55	**8-3V5.60**	**126.00**	7/16	1B	SK	1 7/8	1 7/32	10.0
6.00	5.95	**8-3V6.00**	**128.00**	7/16	1B	SK	1 7/8	1 7/32	11.7
6.50	6.45	**8-3V6.50**	**130.00**	7/16	1B	SK	1 7/8	1 7/32	13.6
6.90	6.85	**8-3V6.90**	**132.00**	7/16	1B	SK	1 7/8	1 7/32	15.3
8.00	7.95	**8-3V8.00**	**148.00**	5/16	1W	SF	2	1 7/32	19.6
10.60	10.55	**8-3V10.60**	**210.00**	5/32	1A	SF	2	1 3/8	25.8
14.00	13.95	**8-3V14.00**	**284.00**	1/8	6A	E	2 5/8	1 1/32	40.8
19.00	18.95	**8-3V19.00**	**444.00**	1/8	6A	E	2 5/8	1 1/32	61.7
25.00	24.95	**8-3V25.00**	**520.00**	3/16	6A	E	2 5/8	1 3/32	94.0
33.50	33.45	**8-3V33.50**	**980.00**	15/32	6A	F	3 5/8	3/8	153.0

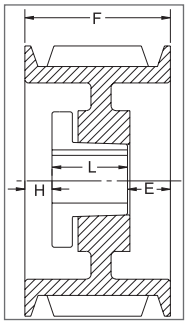

TYPE 1

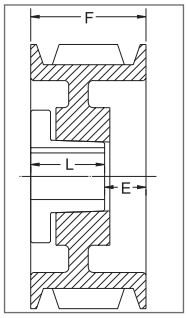

TYPE 4

DIMENSIONS 10 GROOVES

O.D.	Datum dia.	Part No	List Price $	F = 4 11/32 inches					
				H	Type	B	L	E	Wt
4.75	4.70	**10-3V4.75**[1]	**126.00**	13/16	11B	SK	1 7/8	3 9/32	8.7
5.00	4.95	**10-3V5.00**[1]	**128.00**	13/16	11B	SK	1 7/8	3 9/32	10.7
5.30	5.25	**10-3V5.30**	**130.00**	9/16	1B	SK	1 7/8	1 29/32	9.8
5.60	5.55	**10-3V5.60**	**132.00**	9/16	1B	SK	1 7/8	1 29/32	11.6
6.00	5.95	**10-3V6.00**	**134.00**	9/16	1B	SK	1 7/8	1 29/32	13.6
6.50	6.45	**10-3V6.50**	**144.00**	9/16	1B	SK	1 7/8	1 29/32	15.8
6.90	6.85	**10-3V6.90**	**146.00**	9/16	1B	SK	1 7/8	1 29/32	17.5
8.00	7.95	**10-3V8.00**	**194.00**	11/16	1W	SF	2	1 21/32	21.8
10.60	10.55	**10-3V10.60**	**250.00**	0	4W	E	2 5/8	1 23/32	36.3
14.00	13.95	**10-3V14.00**	**320.00**	0	4A	E	2 5/8	1 23/32	49.9
19.00	18.95	**10-3V19.00**	**472.00**	0	4A	E	2 5/8	1 23/32	74.0
25.00	24.95	**10-3V25.00**	**596.00**	1/16	6A	F	3 5/8	25/32	105.0
33.50	33.45	**10-3V33.50**	**1100.00**	1/16	6A	F	3 5/8	25/32	180.0

P.D. for "3V" Belts = O.D.
[1] Reverse mount only.

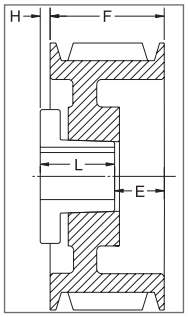

TYPE 6

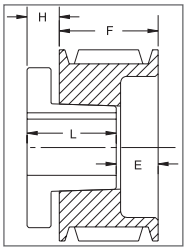

TYPE 11

5V SECTION

DIMENSIONS 2 GROOVES

O.D.	Datum dia.	Part No	List Price $	F = 1 11/16 inches					
				H	Type	B	L	E	Wt
4.40	4.30	**2-5V4.40[2]**	**73.00**	15/32	6B	SH	1 1/4	29/32	4.0
4.65	4.55	**2-5V4.65[1]***	**79.00**	11/16	11B	SDS	1 5/16	1 1/16	4.0
4.90	4.80	**2-5V4.90**	**85.00**	7/32	4B	SDS	1 5/16	3/8	3.8
5.20	5.10	**2-5V5.20**	**91.00**	0	4B	SDS	1 5/16	3/8	4.8
5.50	5.40	**2-5V5.50**	**97.00**	0	4B	SDS	1 5/16	3/8	5.5
5.90	5.80	**2-5V5.90**	**103.00**	0	4B	SDS	1 5/16	3/8	6.5
6.30	6.20	**2-5V6.30**	**109.00**	7/16	6B	SK	1 7/8	1/4	7.7
6.70	6.60	**2-5V6.70**	**115.00**	7/16	6B	SK	1 7/8	1/4	9.3
7.10	7.00	**2-5V7.10**	**120.00**	3/8	6B	SK	1 7/8	3/16	10.6
7.50	7.40	**2-5V7.50**	**122.00**	3/8	6B	SK	1 7/8	3/16	12.0
8.00	7.90	**2-5V8.00**	**124.00**	3/8	6B	SK	1 7/8	3/16	14.1
8.50	8.40	**2-5V8.50**	**128.00**	3/8	6B	SK	1 7/8	3/16	16.3
9.00	8.90	**2-5V9.00**	**136.00**	3/8	6B	SK	1 7/8	3/16	18.3
9.25	9.15	**2-5V9.25**	**144.00**	3/8	6W	SK	1 7/8	3/16	16.5
9.75	9.65	**2-5V9.75**	**148.00**	3/8	6W	SK	1 7/8	3/16	17.7
10.30	10.20	**2-5V10.30**	**152.00**	3/8	6W	SK	1 7/8	3/16	18.3
10.90	10.80	**2-5V10.90**	**156.00**	3/8	6W	SK	1 7/8	3/16	20.7
11.30	11.20	**2-5V11.30**	**160.00**	3/8	6A	SK	1 7/8	3/16	16.9
11.80	11.70	**2-5V11.80**	**162.00**	3/8	6A	SK	1 7/8	3/16	18.4
12.50	12.40	**2-5V12.50**	**164.00**	3/8	6A	SF	2	1/16	20.8
13.20	13.10	**2-5V13.20**	**176.00**	3/8	6A	SF	2	1/16	22.2
14.00	13.90	**2-5V14.00**	**230.00**	3/8	6A	SF	2	1/16	23.1
15.00	14.90	**2-5V15.00**	**234.00**	3/8	6A	SF	2	1/16	25.3
16.00	15.90	**2-5V16.00**	**252.00**	3/8	6A	SF	2	1/16	26.9
18.70	18.60	**2-5V18.70**	**300.00**	3/8	6A	SF	2	1/16	34.7
21.20	21.10	**2-5V21.20**	**416.00**	3/8	6A	SF	2	1/16	46.7
23.60	23.50	**2-5V23.60**	**480.00**	5/16	5A	E	2 5/8	5/8	53.2
28.00	27.90	**2-5V28.00**	**520.00**	5/16	5A	E	2 5/8	5/8	66.1

P.D. for "5V" Belts = O.D.
[1] Reverse mount only.
[2] This sheave can only be reverse mounted with standard bushing bolts. Specials bolts (not provided by Baldor) are required for standard mount. (see page 9)
* Mounting bolts are supplied by Baldor with this sheave.

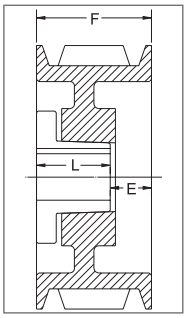

TYPE 4

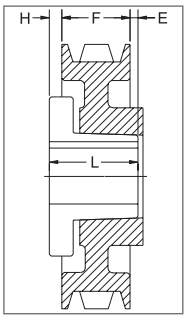

TYPE 5

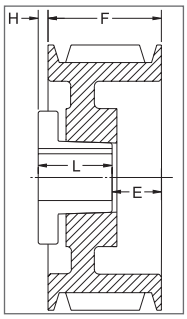

TYPE 6

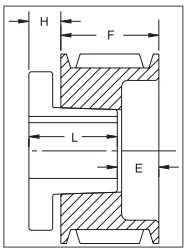

TYPE 11

5V SECTION

DIMENSIONS 3 GROOVES

O.D.	Datum dia.	Part No	List Price $	F = 2 3/8 inches					
				H	Type	B	L	E	Wt
4.40	4.30	**3-5V4.40[1]***	**79.00**	11/16	11B	SDS	1 5/16	1 3/4	4.6
4.65	4.55	**3-5V4.65[1]***	**85.00**	11/16	11B	SDS	1 5/16	1 3/4	5.2
4.90	4.80	**3-5V4.90***	**91.00**	3/8	1B	SDS	1 5/16	11/16	5.0
5.20	5.10	**3-5V5.20**	**97.00**	3/8	1B	SDS	1 5/16	11/16	5.8
5.50	5.40	**3-5V5.50**	**103.00**	5/16	1B	SDS	1 5/16	3/4	6.3
5.90	5.80	**3-5V5.90**	**109.00**	5/16	1B	SDS	1 5/16	3/4	8.4
6.30	6.20	**3-5V6.30**	**115.00**	1/4	1B	SK	1 7/8	1/4	9.6
6.70	6.60	**3-5V6.70**	**121.00**	1/4	1B	SK	1 7/8	1/4	11.9
7.10	7.00	**3-5V7.10**	**128.00**	3/16	1B	SF	2	3/16	12.3
7.50	7.40	**3-5V7.50**	**134.00**	3/16	1B	SF	2	3/16	13.8
8.00	7.90	**3-5V8.00**	**142.00**	3/16	1B	SF	2	3/16	16.2
8.50	8.40	**3-5V8.50**	**146.00**	1/16	6B	SF	2	7/16	18.1
9.00	8.90	**3-5V9.00**	**150.00**	1/16	6B	SF	2	7/16	20.7
9.25	9.15	**3-5V9.25**	**156.00**	1/16	6W	SF	2	7/16	20.3
9.75	9.65	**3-5V9.75**	**162.00**	1/16	6W	SF	2	7/16	20.4
10.30	10.20	**3-5V10.30**	**172.00**	1/16	6W	SF	2	7/16	21.6
10.90	10.80	**3-5V10.90**	**176.00**	1/16	6W	SF	2	7/16	23.3
11.30	11.20	**3-5V11.30**	**180.00**	1/16	6A	SF	2	7/16	22.8
11.80	11.70	**3-5V11.80**	**194.00**	1/16	6A	SF	2	7/16	24.9
12.50	12.40	**3-5V12.50**	**202.00**	11/16	6A	E	2 5/8	7/16	30.7
13.20	13.10	**3-5V13.20**	**212.00**	11/16	6A	E	2 5/8	7/16	32.5
14.00	13.90	**3-5V14.00**	**258.00**	11/16	6A	E	2 5/8	7/16	35.8
15.00	14.90	**3-5V15.00**	**274.00**	11/16	6A	E	2 5/8	7/16	38.2
16.00	15.90	**3-5V16.00**	**282.00**	11/16	6A	E	2 5/8	7/16	40.9
18.70	18.60	**3-5V18.70**	**328.00**	5/16	6A	E	2 5/8	1/16	46.9
21.20	21.10	**3-5V21.20**	**440.00**	11/16	6A	E	2 5/8	7/16	62.0
23.60	23.50	**3-5V23.60**	**500.00**	11/32	6A	E	2 5/8	3/32	60.6
28.00	27.90	**3-5V28.00**	**540.00**	5/16	6A	E	2 5/8	1/16	101.0
31.50	31.40	**3-5V31.50**	**920.00**	31/32	5A	F	3 5/8	9/32	113.0
37.50	37.40	**3-5V37.50**	**1180.00**	31/32	5A	F	3 5/8	9/32	155.0
50.00	49.90	**3-5V50.00**	**1780.00**	31/32	5A	F	3 5/8	9/32	220.0

P.D. for "5V" Belts = O.D.
[1] Reverse mount only.
* Mounting bolts are supplied by Baldor with this sheave

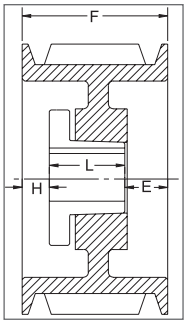

TYPE 1

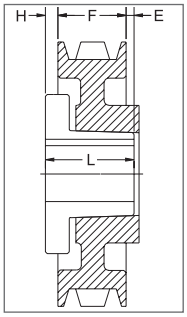

TYPE 5

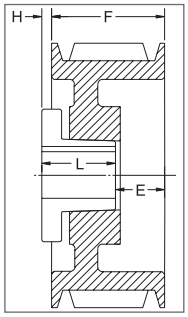

TYPE 6

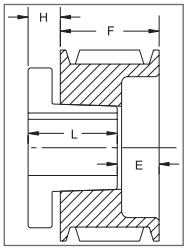

TYPE 11

SHEAVES

5V SECTION

DIMENSIONS 4 GROOVES

O.D.	Datum dia.	Part No	List Price $	F = 3 1/16 inches					
				H	Type	B	L	E	Wt
4.40	4.30	**4-5V4.40[1]***	**92.00**	11/16	11B	SD	1 13/16	1 15/16	5.9
4.65	4.55	**4-5V4.65[1]***	**98.00**	11/16	11B	SD	1 13/16	1 15/16	6.7
4.90	4.80	**4-5V4.90***	**104.00**	5/8	1B	SD	1 13/16	5/8	6.6
5.20	5.10	**4-5V5.20**	**110.00**	5/8	1B	SD	1 13/16	5/8	7.8
5.50	5.40	**4-5V5.50**	**116.00**	5/8	1B	SD	1 13/16	5/8	9.6
5.90	5.80	**4-5V5.90**	**122.00**	5/8	1B	SD	1 13/16	5/8	11.0
6.30	6.20	**4-5V6.30**	**128.00**	1/2	1B	SK	1 7/8	11/16	11.7
6.70	6.60	**4-5V6.70**	**134.00**	1/2	1B	SK	1 7/8	11/16	14.5
7.10	7.00	**4-5V7.10**	**140.00**	1/4	1B	SF	2	13/16	14.5
7.50	7.40	**4-5V7.50**	**148.00**	1/4	1B	SF	2	13/16	16.3
8.00	7.90	**4-5V8.00**	**156.00**	3/8	1B	E	2 5/8	1/16	17.9
8.50	8.40	**4-5V8.50**	**162.00**	3/8	1B	E	2 5/8	1/16	21.7
9.00	8.90	**4-5V9.00**	**164.00**	3/8	1B	E	2 5/8	1/16	24.4
9.25	9.15	**4-5V9.25**	**168.00**	3/8	1B	E	2 5/8	1/16	26.2
9.75	9.65	**4-5V9.75**	**196.00**	3/8	1B	E	2 5/8	1/16	29.6
10.30	10.20	**4-5V10.30**	**200.00**	0	4W	E	2 5/8	7/16	29.8
10.90	10.80	**4-5V10.90**	**206.00**	0	4W	E	2 5/8	7/16	32.4
11.30	11.20	**4-5V11.30**	**224.00**	3/8	1W	E	2 5/8	1/16	35.5
11.80	11.70	**4-5V11.80**	**226.00**	0	4W	E	2 5/8	7/16	32.7
12.50	12.40	**4-5V12.50**	**234.00**	3/8	1A	E	2 5/8	1/16	35.7
13.20	13.10	**4-5V13.20**	**256.00**	0	4A	E	2 5/8	7/16	37.2
14.00	13.90	**4-5V14.00**	**290.00**	0	4A	E	2 5/8	7/16	41.1
15.00	14.90	**4-5V15.00**	**320.00**	0	4A	E	2 5/8	7/16	44.6
16.00	15.90	**4-5V16.00**	**340.00**	0	4A	E	2 5/8	7/16	49.9
18.70	18.60	**4-5V18.70**	**380.00**	3/16	1A	E	2 5/8	1/4	59.2
21.20	21.10	**4-5V21.20**	**512.00**	3/16	1A	E	2 5/8	1/4	65.0
23.60	23.50	**4-5V23.60**	**546.00**	21/32	6A	F	3 5/8	3/32	84.8
28.00	27.90	**4-5V28.00**	**620.00**	21/32	6A	F	3 5/8	3/32	112.6
31.50	31.40	**4-5V31.50**	**970.00**	11/32	5A	F	3 5/8	7/32	140.9
37.50	37.40	**4-5V37.50**	**1240.00**	21/32	6A	F	3 5/8	3/32	172.0
50.00	49.90	**4-5V50.00**	**1880.00**	15/16	5A	J	4 1/2	1/2	269.0

P.D. for "5V" Belts = O.D.
[1] Reverse mount only.
* Mounting bolts are supplied by Baldor with this sheave

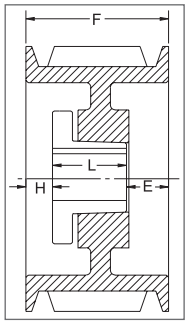

TYPE 1

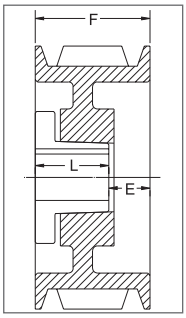

TYPE 4

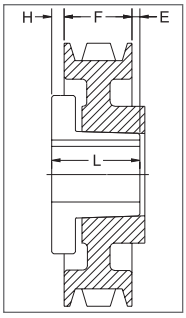

TYPE 5

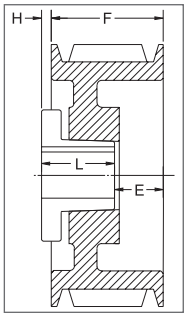

TYPE 6

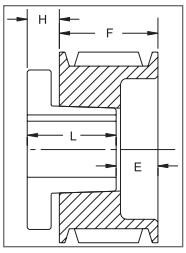

TYPE 11

5V SECTION

DIMENSIONS 5 GROOVES

O.D.	Datum dia.	Part No	List Price $	F = 3 3/4 inches					
				H	Type	B	L	E	Wt
4.40	4.30	**5-5V4.40[1]***	**104.00**	11/16	11B	SD	1 13/16	2 5/8	6.3
4.65	4.55	**5-5V4.65[1]***	**110.00**	11/16	11B	SD	1 13/16	2 5/8	7.0
4.90	4.80	**5-5V4.90***	**116.00**	5/8	1B	SD	1 13/16	1 5/16	7.9
5.20	5.10	**5-5V5.20**	**122.00**	5/8	1B	SD	1 13/16	1 5/16	9.7
5.50	5.40	**5-5V5.50**	**128.00**	5/8	1B	SD	1 13/16	1 5/16	10.9
5.90	5.80	**5-5V5.90**	**134.00**	1/2	1B	SK	1 7/8	1 3/8	11.2
6.30	6.20	**5-5V6.30**	**140.00**	1/2	1B	SK	1 7/8	1 3/8	12.2
6.70	6.60	**5-5V6.70**	**146.00**	1/2	1B	SF	2	1 1/4	13.2
7.10	7.00	**5-5V7.10**	**156.00**	9/16	1B	SF	2	1 3/16	16.7
7.50	7.40	**5-5V7.50**	**174.00**	9/16	1B	SF	2	1 3/16	18.5
8.00	7.90	**5-5V8.00**	**184.00**	5/16	1B	E	2 5/8	13/16	20.0
8.50	8.40	**5-5V8.50**	**190.00**	5/16	1B	E	2 5/8	13/16	24.4
9.00	8.90	**5-5V9.00**	**198.00**	5/16	1B	E	2 5/8	13/16	27.4
9.25	9.15	**5-5V9.25**	**202.00**	5/16	1B	E	2 5/8	13/16	29.2
9.75	9.65	**5-5V9.75**	**218.00**	5/16	1B	E	2 5/8	13/16	32.8
10.30	10.20	**5-5V10.30**	**220.00**	5/16	1W	E	2 5/8	13/16	31.1
10.90	10.80	**5-5V10.90**	**222.00**	5/16	1W	E	2 5/8	13/16	33.0
11.30	11.20	**5-5V11.30**	**242.00**	5/16	1W	E	2 5/8	13/16	35.0
11.80	11.70	**5-5V11.80**	**244.00**	5/16	1W	E	2 5/8	13/16	37.3
12.50	12.40	**5-5V12.50**	**282.00**	5/16	1W	E	2 5/8	13/16	38.9
13.20	13.10	**5-5V13.20**	**300.00**	5/16	1W	E	2 5/8	13/16	41.8
14.00	13.90	**5-5V14.00**	**344.00**	5/16	1A	E	2 5/8	13/16	45.3
15.00	14.90	**5-5V15.00**	**384.00**	5/16	1A	E	2 5/8	13/16	49.1
16.00	15.90	**5-5V16.00**	**404.00**	5/16	1A	E	2 5/8	13/16	51.9
18.70	18.60	**5-5V18.70**	**432.00**	9/32	6A	F	3 5/8	13/32	86.0
21.20	21.10	**5-5V21.20**	**536.00**	7/32	6A	F	3 5/8	11/32	84.7
23.60	23.50	**5-5V23.60**	**586.00**	7/32	6A	F	3 5/8	11/32	111.0
28.00	27.90	**5-5V28.00**	**660.00**	7/32	6A	F	3 5/8	11/32	128.0
31.50	31.40	**5-5V31.50**	**1080.00**	19/64	6A	J	4 1/2	25/64	174.0
37.50	37.40	**5-5V37.50**	**1380.00**	7/8	6A	J	4 1/2	1/8	199.0
50.00	49.90	**5-5V50.00**	**1920.00**	7/8	6A	J	4 1/2	1/8	319.0

P.D. for "5V" Belts = O.D.
[1] Reverse mount only.
* Mounting bolts are supplied by Baldor with this sheave.

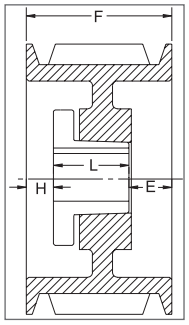

TYPE 1

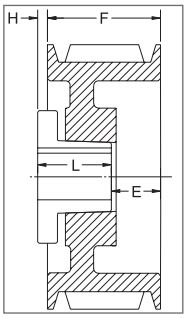

TYPE 6

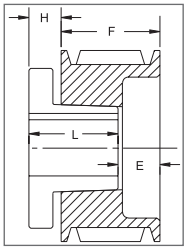

TYPE 11

SHEAVES

5V SECTION

DIMENSIONS 6 GROOVES

O.D.	Datum dia.	Part No	List Price $	F = 4 7/16 inches					
				H	Type	B	L	E	Wt
4.40	4.30	**6-5V4.40[1]***	**114.00**	11/16	11B	SD	1 13/16	3 5/16	7.2
4.65	4.55	**6-5V4.65[1]***	**120.00**	11/16	11B	SD	1 13/16	3 5/16	8.0
4.90	4.80	**6-5V4.90***	**126.00**	5/8	1B	SD	1 13/16	2	7.6
5.20	5.10	**6-5V5.20**	**132.00**	5/8	1B	SD	1 13/16	2	9.6
5.50	5.40	**6-5V5.50**	**138.00**	5/8	1B	SD	1 13/16	2	11.1
5.90	5.80	**6-5V5.90**	**144.00**	1/2	1B	SK	1 7/8	2 1/16	10.9
6.30	6.20	**6-5V6.30**	**150.00**	1/2	1B	SK	1 7/8	2 1/16	13.5
6.70	6.60	**6-5V6.70**	**154.00**	13/16	1B	SF	2	1 5/8	14.2
7.10	7.00	**6-5V7.10**	**160.00**	13/16	1B	SF	2	1 5/8	18.8
7.50	7.40	**6-5V7.50**	**176.00**	13/16	1B	SF	2	1 5/8	20.8
8.00	7.90	**6-5V8.00**	**186.00**	15/16	1B	E	2 5/8	7/8	22.3
8.50	8.40	**6-5V8.50**	**198.00**	15/16	1B	E	2 5/8	7/8	27.1
9.00	8.90	**6-5V9.00**	**220.00**	15/16	1B	E	2 5/8	7/8	30.5
9.25	9.15	**6-5V9.25**	**224.00**	15/16	1B	E	2 5/8	7/8	32.2
9.75	9.65	**6-5V9.75**	**228.00**	15/16	1B	E	2 5/8	7/8	36.2
10.30	10.20	**6-5V10.30**	**248.00**	9/16	1W	E	2 5/8	1 1/4	33.6
10.90	10.80	**6-5V10.90**	**260.00**	9/16	1W	E	2 5/8	1 1/4	36.9
11.30	11.20	**6-5V11.30**	**260.00**	9/16	1W	E	2 5/8	1 1/4	37.7
11.80	11.70	**6-5V11.80**	**262.00**	9/16	1W	E	2 5/8	1 1/4	38.5
12.50	12.40	**6-5V12.50**	**320.00**	17/32	1W	F	3 5/8	9/32	43.3
13.20	13.10	**6-5V13.20**	**342.00**	17/32	1W	F	3 5/8	9/32	46.0
14.00	13.90	**6-5V14.00**	**384.00**	17/32	1W	F	3 5/8	9/32	45.7
15.00	14.90	**6-5V15.00**	**424.00**	17/32	1A	F	3 5/8	9/32	49.2
16.00	15.90	**6-5V16.00**	**464.00**	17/32	1A	F	3 5/8	9/32	77.0
18.70	18.60	**6-5V18.70**	**520.00**	3/32	1A	F	3 5/8	23/32	78.6
21.20	21.10	**6-5V21.20**	**590.00**	7/32	6A	F	3 5/8	1 1/32	96.1
23.60	23.50	**6-5V23.60**	**660.00**	15/32	6A	J	4 1/2	13/32	114.3
28.00	27.90	**6-5V28.00**	**740.00**	15/32	6A	J	4 1/2	13/32	130.6
31.50	31.40	**6-5V31.50**	**1180.00**	15/32	6A	J	4 1/2	13/32	155.0
37.50	37.40	**6-5V37.50**	**1440.00**	15/32	6A	J	4 1/2	13/32	221.0
50.00	49.90	**6-5V50.00**	**2220.00**	1 13/32	5A	M°	6 3/4	29/32	350.0

P.D. for "5V" Belts = O.D.
°Note: M-N-P-W bushings are standard mounting only for these parts. See page 9 for installation instructions.
[1] Reverse mount only.
* Mounting bolts are supplied by Baldor with this sheave

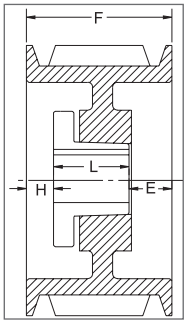

TYPE 1

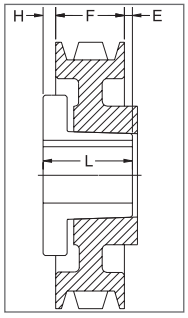

TYPE 5

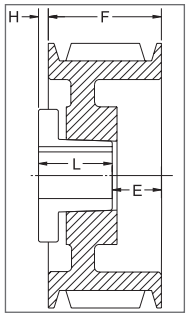

TYPE 6

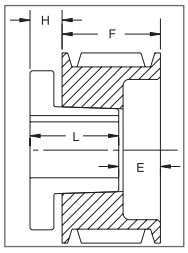

TYPE 11

5V SECTION

DIMENSIONS 7 GROOVES

(Contact your sales representative for price & availability)

O.D.	Datum dia.	Part No	List Price $	F = 5 1/8 inches					
				H	Type	B	L	E	Wt
7.10	7.00	**7-5V7.10**	-	1 1/16	1B	SF	2	2 1/16	20.8
7.50	7.40	**7-5V7.50**	-	1 1/16	1B	SF	2	2 1/16	23.0
8.00	7.90	**7-5V8.00**	-	1 1/16	1B	E	2 5/8	1 7/16	24.0
8.50	8.40	**7-5V8.50**	-	1 1/16	1B	E	2 5/8	1 7/16	30.0
9.00	8.90	**7-5V9.00**	-	1 1/16	1B	E	2 5/8	1 7/16	33.3
9.25	9.15	**7-5V9.25**	-	1 1/32	1B	F	3 5/8	15/32	38.8
9.75	9.65	**7-5V9.75**	-	1 1/32	1B	F	3 5/8	15/32	42.0
10.30	10.20	**7-5V10.30**	-	1 1/32	1B	F	3 5/8	15/32	50.3
10.90	10.80	**7-5V10.90**	-	1 1/32	1B	F	3 5/8	15/32	57.5
11.30	11.20	**7-5V11.30**	-	1 1/32	1W	F	3 5/8	15/32	53.0
11.80	11.70	**7-5V11.80**	-	1 1/32	1W	F	3 5/8	15/32	55.5
12.50	12.40	**7-5V12.50**	-	1 1/32	1W	F	3 5/8	15/32	58.3
13.20	13.10	**7-5V13.20**	-	1 1/32	1W	F	3 5/8	15/32	62.8
14.00	13.90	**7-5V14.00**	-	1 1/32	1W	F	3 5/8	15/32	72.0
15.00	14.90	**7-5V15.00**	-	1 1/32	1A	F	3 5/8	15/32	73.6
16.00	15.90	**7-5V16.00**	-	1 1/32	1A	F	3 5/8	15/32	79.5
18.70	18.60	**7-5V18.70**	-	5/32	1A	J	4 1/2	15/32	105.5
21.20	21.10	**7-5V21.20**	-	7/32	6A	J	4 1/2	27/32	111.0
23.60	23.50	**7-5V23.60**	-	5/32	1A	J	4 1/2	15/32	136.3
28.00	27.90	**7-5V28.00**	-	7/32	6A	J	4 1/2	27/32	174.5
31.50	31.40	**7-5V31.50**	-	15/32	5A	M°	6 3/4	1 5/32	248.0
37.50	37.40	**7-5V37.50**	-	31/32	5A	M°	6 3/4	21/32	315.0
50.00	49.90	**7-5V50.00**	-	29/32	5A	M°	6 3/4	23/32	480.0

P.D. for "5V" Belts = O.D.
°Note: M-N-P-W bushings are standard mounting only for these parts. See page 9 for installation instructions.

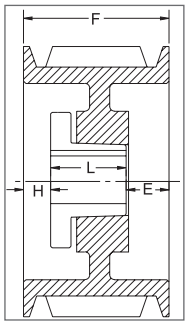

TYPE 1

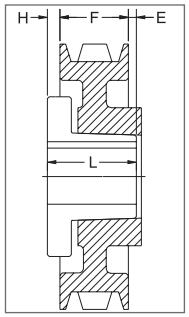

TYPE 5

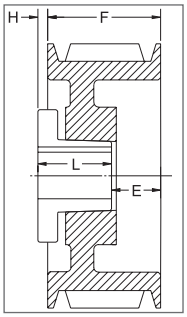

TYPE 6

5V SECTION

DIMENSIONS 8 GROOVES

O.D.	Datum dia.	Part No	List Price $	F = 5 13/16 inches					
				H	Type	B	L	E	Wt
7.10	7.00	**8-5V7.10**	**186.00**	1 5/16	1B	SF	2	2 1/2	23.0
7.50	7.40	**8-5V7.50**	**206.00**	1 5/16	1B	SF	2	2 1/2	20.0
8.00	7.90	**8-5V8.00**	**226.00**	1 7/16	1B	E	2 5/8	1 3/4	26.0
8.50	8.40	**8-5V8.50**	**248.00**	1 7/16	1B	E	2 5/8	1 3/4	33.0
9.00	8.90	**8-5V9.00**	**268.00**	1 7/16	1B	E	2 5/8	1 3/4	36.0
9.25	9.15	**8-5V9.25**	**300.00**	1 1/32	1B	F	3 5/8	1 5/32	41.8
9.75	9.65	**8-5V9.75**	**320.00**	1 1/32	1B	F	3 5/8	1 5/32	47.3
10.30	10.20	**8-5V10.30**	**340.00**	1 1/32	1B	F	3 5/8	1 5/32	53.8
10.90	10.80	**8-5V10.90**	**348.00**	1 1/32	1B	F	3 5/8	1 5/32	61.1
11.30	11.20	**8-5V11.30**	**356.00**	1 1/32	1W	F	3 5/8	1 5/32	56.9
11.80	11.70	**8-5V11.80**	**374.00**	1 1/32	1W	F	3 5/8	1 5/32	59.6
12.50	12.40	**8-5V12.50**	**388.00**	1 1/32	1W	F	3 5/8	1 5/32	62.7
13.20	13.10	**8-5V13.20**	**440.00**	1 1/32	1W	F	3 5/8	1 5/32	66.9
14.00	13.90	**8-5V14.00**	**480.00**	1 1/32	1W	F	3 5/8	1 5/32	76.9
15.00	14.90	**8-5V15.00**	**560.00**	1 1/32	1A	F	3 5/8	1 5/32	79.0
16.00	15.90	**8-5V16.00**	**640.00**	1 1/32	1A	F	3 5/8	1 5/32	85.2
18.70	18.60	**8-5V18.70**	**700.00**	5/32	1A	J	4 1/2	1 5/32	112.4
21.20	21.10	**8-5V21.20**	**760.00**	7/32	6A	J	4 1/2	1 17/32	119.0
23.60	23.50	**8-5V23.60**	**840.00**	5/32	1A	J	4 1/2	1 5/32	145.0
28.00	27.90	**8-5V28.00**	**1020.00**	7/32	6A	J	4 1/2	1 17/32	185.0
31.50	31.40	**8-5V31.50**	**1440.00**	7/32	2A	M°	6 3/4	1 5/32	260.0
37.50	37.40	**8-5V37.50**	**1780.00**	9/32	5A	M°	6 3/4	21/32	329.0
50.00	49.90	**8-5V50.00**	**2440.00**	7/32	5A	M°	6 3/4	23/32	500.0

P.D. for "5V" Belts = O.D.
°Note: M-N-P-W bushings are standard mounting only for these parts. See page 9 for installation instructions.

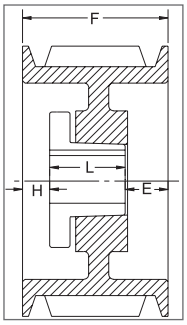

TYPE 1

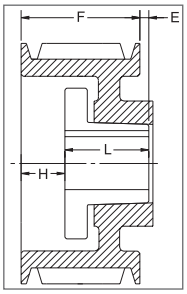

TYPE 2

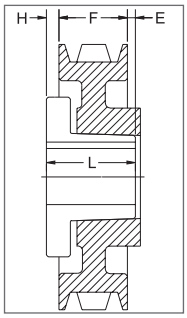

TYPE 5

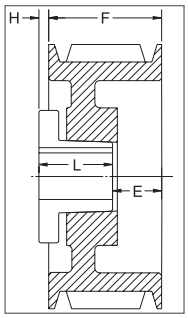

TYPE 6

5V SECTION

DIMENSIONS 9 GROOVES

(Contact your sales representative for price & availability)

O.D.	Datum dia.	Part No	List Price $	F = 6 1/2 inches					
				H	Type	B	L	E	Wt
8.00	7.90	**9-5V8.00**	-	1 13/16	1B	E	2 5/8	2 1/16	30.5
8.50	8.40	**9-5V8.50**	-	1 13/16	1B	E	2 5/8	2 1/16	38.3
9.00	8.90	**9-5V9.00**	-	1 23/32	1B	F	3 5/8	1 5/32	46.0
9.25	9.15	**9-5V9.25**	-	1 23/32	1B	F	3 5/8	1 5/32	48.0
9.75	9.65	**9-5V9.75**	-	1 23/32	1B	F	3 5/8	1 5/32	54.2
10.30	10.20	**9-5V10.30**	-	1 23/32	1B	F	3 5/8	1 5/32	60.9
10.90	10.80	**9-5V10.90**	-	1 23/32	1B	F	3 5/8	1 5/32	68.0
11.30	11.20	**9-5V11.30**	-	1 23/32	1B	F	3 5/8	1 5/32	68.0
11.80	11.70	**9-5V11.80**	-	1 23/32	1W	F	3 5/8	1 5/32	72.0
12.50	12.40	**9-5V12.50**	-	1 3/32	1W	J	4 1/2	29/32	85.0
13.20	13.10	**9-5V13.20**	-	1 3/32	1W	J	4 1/2	29/32	94.0
14.00	13.90	**9-5V14.00**	-	1 15/32	1W	J	4 1/2	17/32	105.0
15.00	14.90	**9-5V15.00**	-	2 5/32	2W	J	4 1/2	5/32	120.0
16.00	15.90	**9-5V16.00**	-	2 5/32	2A	J	4 1/2	5/32	94.0
18.70	18.60	**9-5V18.70**	-	1 15/32	1A	J	4 1/2	17/32	117.0
21.20	21.10	**9-5V21.20**	-	15/32	1A	J	4 1/2	1 17/32	137.0
23.60	23.50	**9-5V23.60**	-	15/32	6A	M°	6 3/4	7/32	236.0
28.00	27.90	**9-5V28.00**	-	7/32	2A	M°	6 3/4	15/32	252.0
31.50	31.40	**9-5V31.50**	-	7/32	2A	M°	6 3/4	15/32	276.0
37.50	37.40	**9-5V37.50**	-	7/32	2A	M°	6 3/4	15/32	358.0
50.00	49.90	**9-5V50.00**	-	9/32	2A	M°	6 3/4	17/32	575.0

P.D. for "5V" Belts = O.D.
°Note: M-N-P-W bushings are standard mounting only for these parts. See page 9 for installation instructions.

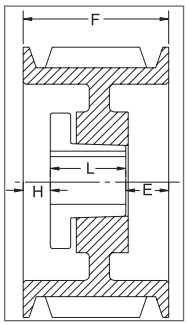

TYPE 1

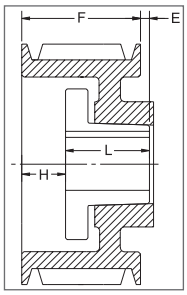

TYPE 2

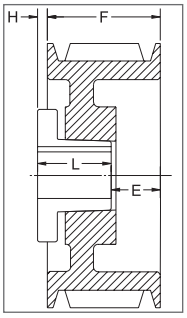

TYPE 6

5V SECTION

DIMENSIONS 10 GROOVES

O.D.	Datum dia.	Part No	List Price $	F = 7 3/16 inches					
				H	Type	B	L	E	Wt
8.00	7.90	**10-5V8.00**	**252.00**	2 3/16	1B	E	2 5/8	2 3/8	32.0
8.50	8.40	**10-5V8.50**	**272.00**	2 3/16	1B	E	2 5/8	2 3/8	38.0
9.00	8.90	**10-5V9.00**	**300.00**	2 3/32	1B	F	3 5/8	1 15/32	46.0
9.25	9.15	**10-5V9.25**	**304.00**	2 3/32	1B	F	3 5/8	1 15/32	48.0
9.75	9.65	**10-5V9.75**	**360.00**	2 3/32	1B	F	3 5/8	1 15/32	54.0
10.30	10.20	**10-5V10.30**	**372.00**	2 3/32	1B	F	3 5/8	1 15/32	61.0
10.90	10.80	**10-5V10.90**	**384.00**	2 3/32	1B	F	3 5/8	1 15/32	69.0
11.30	11.20	**10-5V11.30**	**440.00**	2 3/32	1B	F	3 5/8	1 15/32	73.0
11.80	11.70	**10-5V11.80**	**480.00**	2 3/32	1W	F	3 5/8	1 15/32	77.0
12.50	12.40	**10-5V12.50**	**500.00**	1 25/32	1W	J	4 1/2	29/32	89.4
13.20	13.10	**10-5V13.20**	**580.00**	1 25/32	1W	J	4 1/2	29/32	99.3
14.00	13.90	**10-5V14.00**	**640.00**	2 5/32	1W	J	4 1/2	17/32	110.5
15.00	14.90	**10-5V15.00**	**720.00**	2 5/32	1W	J	4 1/2	17/32	125.0
16.00	15.90	**10-5V16.00**	**780.00**	2 5/32	1A	J	4 1/2	17/32	100.0
18.70	18.60	**10-5V18.70**	**860.00**	2 5/32	1A	J	4 1/2	17/32	123.6
21.20	21.10	**10-5V21.20**	**960.00**	1 5/32	1A	J	4 1/2	1 17/32	144.7
23.60	23.50	**10-5V23.60**	**1040.00**	7/32	1A	M°	6 3/4	7/32	245.0
28.00	27.90	**10-5V28.00**	**1280.00**	7/32	1A	M°	6 3/4	7/32	252.0
31.50	31.40	**10-5V31.50**	**1560.00**	7/32	1A	M°	6 3/4	7/32	288.0
37.50	37.40	**10-5V37.50**	**1840.00**	7/32	1A	M°	6 3/4	7/32	372.0
50.00	49.90	**10-5V50.00**	**2580.00**	9/32	1A	M°	6 3/4	5/32	596.0

P.D. for "5V" Belts = O.D.
°Note: M-N-P-W bushings are standard mounting only for these parts. See page 9 for installation instructions.

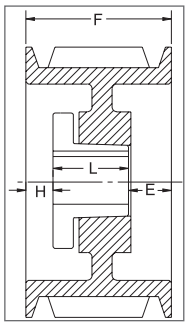

TYPE 1

8V SECTION

DIMENSIONS 4 GROOVES

O.D.	Datum dia.	Part No	List Price $	F = 4 7/8 inches					
				H	Type	B	L	E	Wt
12.5	12.3	**4-8V12.50**	**544.00**	1/32	6W	F	3 5/8	1 9/32	69.0
13.2	13.0	**4-8V13.20**	**552.00**	1/32	6W	F	3 5/8	1 9/32	72.5
14.0	13.8	**4-8V14.00**	**560.00**	1/32	6W	F	3 5/8	1 9/32	84.0
15.0	14.8	**4-8V15.00**	**596.00**	1/32	6W	F	3 5/8	1 9/32	92.8
16.0	15.8	**4-8V16.00**	**660.00**	1/32	6A	F	3 5/8	1 9/32	83.5
17.0	16.8	**4-8V17.00**	**720.00**	1/32	1A	F	3 5/8	1 7/32	106.0
18.0	17.8	**4-8V18.00**	**760.00**	1/32	1A	F	3 5/8	1 7/32	100.0
19.0	18.8	**4-8V19.00**	**790.00**	1/32	6A	F	3 5/8	1 9/32	113.0
20.0	19.8	**4-8V20.00**	**820.00**	3/32	1A	J	4 1/2	9/32	117.8
21.2	21.0	**4-8V21.20**	**840.00**	3/32	1A	J	4 1/2	9/32	139.0
22.4	22.2	**4-8V22.40**	**886.00**	3/32	1A	J	4 1/2	9/32	150.0
24.8	24.6	**4-8V24.80**	**1190.00**	27/32	5A	M°	6 3/4	1 1/32	225.0
30.0	29.8	**4-8V30.00**	**1350.00**	27/32	5A	M°	6 3/4	1 1/32	261.0
35.5	35.3	**4-8V35.50**	**1790.00**	27/32	5A	M°	6 3/4	1 1/32	321.0
40.0	39.8	**4-8V40.00**	**1970.00**	27/32	5A	M°	6 3/4	1 1/32	365.0
44.5	44.3	**4-8V44.50**	**2590.00**	27/32	5A	M°	6 3/4	1 1/32	424.0
53.0	52.8	**4-8V53.00**	**3240.00**	27/32	5A	M°	6 3/4	1 1/32	560.0

P.D. for "8V" Belts = O.D.
°Note: M-N-P-W bushings are standard mounting only for these parts. See page 9 for installation instructions.

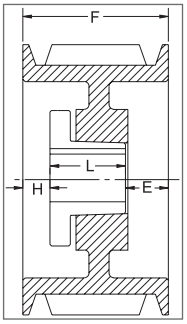

TYPE 1

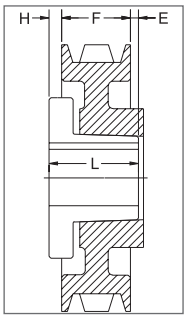

TYPE 5

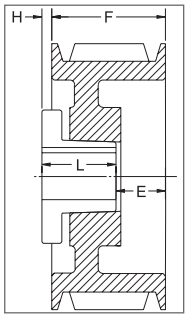

TYPE 6

8V SECTION

DIMENSIONS 5 GROOVES

O.D.	Datum dia.	Part No	List Price $	F = 6 inches					
				H	Type	B	L	E	Wt
12.5	12.3	**5-8V12.50**	**588.00**	1 1/16	1W	F	3 5/8	1 5/16	78.0
13.2	13.0	**5-8V13.20**	**618.00**	1 1/16	1W	F	3 5/8	1 5/16	84.9
14.0	13.8	**5-8V14.00**	**660.00**	1 1/16	1W	F	3 5/8	1 5/16	93.0
15.0	14.8	**5-8V15.00**	**700.00**	1 3/32	1W	F	3 5/8	1 9/32	105.0
16.0	15.8	**5-8V16.00**	**740.00**	1 3/32	1A	F	3 5/8	1 9/32	113.0
17.0	16.8	**5-8V17.00**	**846.00**	19/32	1A	J	4 1/2	29/32	119.0
18.0	17.8	**5-8V18.00**	**900.00**	19/32	1A	J	4 1/2	29/32	132.5
19.0	18.8	**5-8V19.00**	**960.00**	19/32	1A	J	4 1/2	29/32	126.0
20.0	19.8	**5-8V20.00**	**990.00**	19/32	1A	J	4 1/2	29/32	135.0
21.2	21.0	**5-8V21.20**	**1150.00**	19/32	1A	J	4 1/2	29/32	160.0
22.4	22.2	**5-8V22.40**	**1310.00**	9/32	2A	M°	6 3/4	1 1/32	217.0
24.8	24.6	**5-8V24.80**	**1390.00**	5/16	2A	M°	6 3/4	1 1/16	246.0
30.0	29.8	**5-8V30.00**	**1570.00**	5/16	2A	M°	6 3/4	1 1/16	296.0
35.5	35.3	**5-8V35.50**	**1990.00**	5/16	2A	M°	6 3/4	1 1/16	377.0
40.0	39.8	**5-8V40.00**	**2240.00**	5/16	2A	M°	6 3/4	1 1/16	441.0
44.5	44.3	**5-8V44.50**	**2990.00**	1 5/16	5A	N°	8 1/8	13/16	528.0
53.0	52.8	**5-8V53.00**	**3480.00**	1 5/16	5A	N°	8 1/8	13/16	669.0

P.D. for "8V" Belts = O.D.
°Note: M-N-P-W bushings are standard mounting only for these parts. See page 9 for installation instructions.

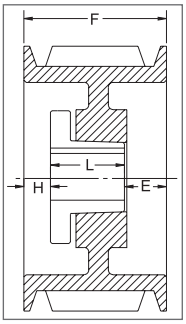

TYPE 1

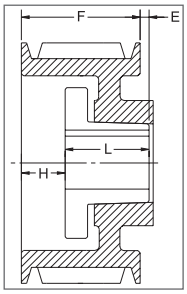

TYPE 2

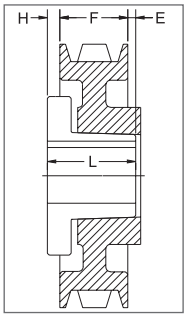

TYPE 5

8V SECTION

DIMENSIONS 6 GROOVES

O.D.	Datum dia.	Part No	List Price $	F = 7 1/8 inches					
				H	Type	B	L	E	Wt
12.5	12.30	**6-8V12.50**	**618.00**	1 3/32	1B	F	3 5/8	2 13/32	79.0
13.2	13.0	**6-8V13.20**	**660.00**	1 1/16	1W	F	3 5/8	2 7/16	94.0
14.0	13.8	**6-8V14.00**	**722.00**	1 1/16	1W	F	3 5/8	2 7/16	104.0
15.0	14.8	**6-8V15.00**	**774.00**	1 5/32	1W	J	4 1/2	1 15/32	123.0
16.0	15.8	**6-8V16.00**	**824.00**	1 5/32	1W	J	4 1/2	1 15/32	138.6
17.0	16.8	**6-8V17.00**	**928.00**	1 5/32	1A	J	4 1/2	1 15/32	125.0
18.0	17.8	**6-8V18.00**	**1000.00**	1 5/32	1A	J	4 1/2	1 15/32	131.0
19.0	18.8	**6-8V19.00**	**1040.00**	1 5/32	1A	J	4 1/2	1 15/32	146.0
20.0	19.8	**6-8V20.00**	**1190.00**	1 9/32	2A	M°	6 3/4	29/32	209.0
21.2	21.0	**6-8V21.20**	**1320.00**	1 9/32	2W	M°	6 3/4	29/32	240.0
22.4	22.2	**6-8V22.40**	**1560.00**	1 9/32	2A	M°	6 3/4	29/32	232.0
24.8	24.6	**6-8V24.80**	**1590.00**	9/32	1A	M°	6 3/4	3/32	257.0
30.0	29.8	**6-8V30.00**	**1610.00**	9/32	1A	M°	6 3/4	3/32	320.0
35.5	35.3	**6-8V35.50**	**2190.00**	3/16	5A	N°	8 1/8	13/16	440.0
40.0	39.8	**6-8V40.00**	**2440.00**	3/16	2A	N°	8 1/8	1 3/16	580.0
44.5	44.3	**6-8V44.50**	**3390.00**	3/16	5A	N°	8 1/8	13/16	590.0
53.0	52.8	**6-8V53.00**	**3720.00**	3/16	5A	N°	8 1/8	13/16	750.0
58.0	57.8	**-**	**-**	-	-	-	-	-	-
63.0	62.8	**6-8V63.00**	**6190.00**	3/4	5A	P°	9 3/8	1 1/2	1050.0
71.0	70.8	**6-8V71.00**	**9000.00**	3/4	5A	P°	9 3/8	1 1/2	1278.0

P.D. for "8V" Belts = O.D.
°Note: M-N-P-W bushings are standard mounting only for these parts. See page 9 for installation instructions.

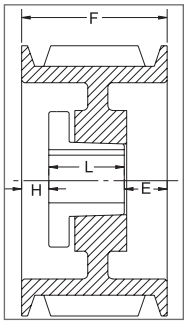

TYPE 1

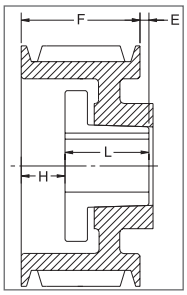

TYPE 2

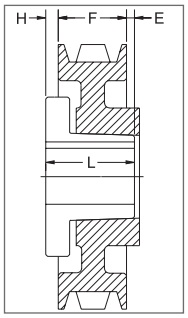

TYPE 5

8V SECTION

DIMENSIONS 8 GROOVES

O.D.	Datum dia.	Part No	List Price $	F = 9 3/8 inches					
				H	Type	B	L	E	Wt
12.5	12.3	**8-8V12.50**	**780.00**	2 1/32	1B	J	4 1/2	2 27/32	119.0
13.2	13.0	**8-8V13.20**	**824.00**	2 1/32	1B	J	4 1/2	2 27/32	135.0
14.0	13.8	**8-8V14.00**	**866.00**	2 1/32	1W	J	4 1/2	2 27/32	135.0
15.0	14.8	**8-8V15.00**	**928.00**	2 1/32	1W	J	4 1/2	2 27/32	150.0
16.0	15.8	**8-8V16.00**	**1010.00**	2 5/32	1W	J	4 1/2	2 23/32	168.7
17.0	16.8	**8-8V17.00**	**1124.00**	2 9/32	1W	M°	6 3/4	11/32	213.0
18.0	17.8	**8-8V18.00**	**1200.00**	2 9/32	1W	M°	6 3/4	11/32	214.0
19.0	18.8	**8-8V19.00**	**1240.00**	2 9/32	1W	M°	6 3/4	11/32	221.0
20.0	19.8	**8-8V20.00**	**1280.00**	2 9/32	1W	M°	6 3/4	11/32	280.0
21.2	21.0	**8-8V21.20**	**1380.00**	2 9/32	1W	M°	6 3/4	11/32	305.0
22.4	22.2	**8-8V22.40**	**1590.00**	2 9/32	1A	M°	6 3/4	11/32	272.0
24.8	24.6	**8-8V24.80**	**1790.00**	3/16	1A	N°	8 1/8	1 1/16	340.0
30.0	29.8	**8-8V30.00**	**1840.00**	3/16	1A	N°	8 1/8	1 1/16	455.0
35.5	35.3	**8-8V35.50**	**2390.00**	3/16	1A	N°	8 1/8	1 1/16	560.0
40.0	39.8	**8-8V40.00**	**2640.00**	3/16	1A	N°	8 1/8	1 1/16	648.0
44.5	44.3	**8-8V44.50**	**3790.00**	1/4	2A	P°	9 3/8	1/4	801.0
53.0	52.8	**8-8V53.00**	**3960.00**	1/4	2A	P°	9 3/8	1/4	1003.0
58.0	57.8	**8-8V58.00**	**5500.00**	1/4	2A	P°	9 3/8	1/4	1142.0
63.0	62.8	**8-8V63.00**	**6990.00**	1/4	2A	P°	9 3/8	1/4	1278.0
71.0	70.8	**8-8V71.00**	**10000.00**	0	5A	W°	11 3/8	2	1670.0
Large Hub Series									
35.5	35.3	**8-8V35.5WOFO**	**3,220.00**	2 5/8	6A	W°	11 3/8	5/8	845,6
40.0	39.8	**8-8V40.0WOFO**	**3,700.00**	2 5/8	6A	W°	11 3/8	5/8	919,0
44.5	44.3	**8-8V44.5WOFO**	**5,100.00**	2 5/8	6A	W°	11 3/8	5/8	1032,0

P.D. for "8V" Belts = O.D.
°Note: M-N-P-W bushings are standard mounting only for these parts. See page 9 for installation instructions.

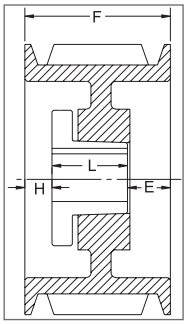

TYPE 1

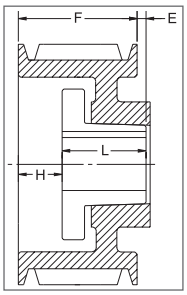

TYPE 2

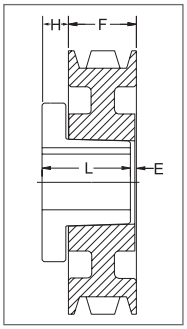

TYPE 6

8V SECTION

DIMENSIONS 10 GROOVES

O.D.	Datum dia.	Part No	List Price $	F = 11 5/8 inches					
				H	Type	B	L	E	Wt
12.5	12.3	**10-8V12.50**	**948.00**	2 5/32	1B	J	4 1/2	4 31/32	135.0
13.2	13.0	**10-8V13.20**	**1114.00**	2 5/32	1B	J	4 1/2	4 31/32	148.0
14.0	13.8	**10-8V14.00**	**1278.00**	2 5/32	1B	J	4 1/2	4 31/32	165.0
15.0	14.8	**10-8V15.00**	**1442.00**	2 9/32	1B	M°	6 3/4	2 19/32	215.0
16.0	15.8	**10-8V16.00**	**1608.00**	2 9/32	1B	M°	6 3/4	2 19/32	235.0
17.0	16.8	**10-8V17.00**	**1648.00**	2 9/32	1W	M°	6 3/4	2 19/32	282.0
18.0	17.8	**10-8V18.00**	**1720.00**	2 9/32	1W	M°	6 3/4	2 19/32	296.0
19.0	18.8	**10-8V19.00**	**1760.00**	2 9/32	1W	M°	6 3/4	2 19/32	300.0
20.0	19.8	**10-8V20.00**	**1860.00**	2 9/32	1W	M°	6 3/4	2 19/32	368.0
21.2	21.0	**10-8V21.20**	**2040.00**	2 9/32	1W	M°	6 3/4	2 19/32	318.0
22.4	22.2	**10-8V22.40**	**2246.00**	3/16	1A	N°	8 1/8	3 5/16	368.0
24.8	24.6	**10-8V24.80**	**2290.00**	3/16	1A	N°	8 1/8	3 5/16	402.0
30.0	29.8	**10-8V30.00**	**2350.00**	3/16	1A	N°	8 1/8	3 5/16	505.0
35.5	35.3	**10-8V35.50**	**2790.00**	1/4	1A	P°	9 3/8	2	675.0
40.0	39.8	**10-8V40.00**	**3350.00**	1/4	1A	P°	9 3/8	2	745.0
44.5	44.3	**10-8V44.50**	**4190.00**	1/4	1A	P°	9 3/8	2	888.0
53.0	52.8	**10-8V53.00**	**5000.00**	1/4	1A	P°	9 3/8	2	1188.0
58.0	57.8	**10-8V58.00**	**7000.00**	3/8	2A	W°	11 3/8	1/8	1445.0
63.0	62.8	**10-8V63.00**	**9000.00**	3/8	2A	W°	11 3/8	1/8	1578.0
71.0	70.8	**10-8V71.00**	**11500.00**	3/8	2A	W°	11 3/8	1/8	1907.0
Large Hub Series									
35.5	35.3	**10-8V35.5WOF0**	**4,200.00**	2 5/8	6A	W°	11 3/8	2 7/8	904,0
40.0	39.8	**10-8V40.0WOF0**	**5,050.00**	2 5/8	6A	W°	11 3/8	2 7/8	988,0
44.5	44.3	**10-8V44.5WOF0**	**6,250.00**	2 5/8	6A	W°	11 3/8	2 7/8	1105

P.D. for "8V" Belts = O.D.
°Note: M-N-P-W bushings are standard mounting only for these parts. See page 9 for installation instructions.

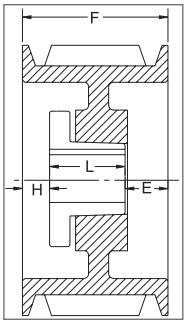

TYPE 1

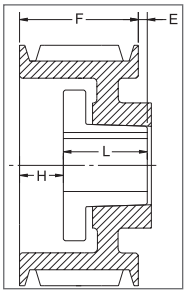

TYPE 2

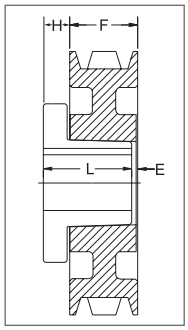

TYPE 6

8V SECTION

DIMENSIONS 12 GROOVES

O.D.	Datum dia.	Part No	List Price $	F = 13 7/8 inches					
				H	Type	B	L	E	Wt
12.5	12.3	**12-8V12.50**	**2080.00**	2 9/32	1B	M°	6 3/4	4 27/32	158.0
13.2	13.0	**12-8V13.20**	**2120.00**	2 9/32	1B	M°	6 3/4	4 27/32	183.0
14.0	13.8	**12-8V14.00**	**2160.00**	2 9/32	1B	M°	6 3/4	4 27/32	210.0
15.0	14.8	**12-8V15.00**	**2200.00**	2 9/32	1B	M°	6 3/4	4 27/32	242.0
16.0	15.8	**12-8V16.00**	**2240.00**	2 9/32	1B	M°	6 3/4	4 27/32	300.0
17.0	16.8	**12-8V17.00**	**2280.00**	2 9/32	1B	M°	6 3/4	4 27/32	321.0
18.0	17.8	**12-8V18.00**	**2320.00**	2 9/32	1B	M°	6 3/4	4 27/32	337.0
19.0	18.8	**12-8V19.00**	**2400.00**	3/16	1B	N°	8 1/8	5 9/16	380.0
20.0	19.8	**12-8V20.00**	**2480.00**	3/16	1W	N°	8 1/8	5 9/16	378.0
21.2	21.0	**12-8V21.20**	**2560.00**	3/16	1W	N°	8 1/8	5 9/16	414.0
22.4	22.2	**12-8V22.40**	**2640.00**	3/16	1A	N°	8 1/8	5 9/16	431.0
24.8	24.6	**12-8V24.80**	**3000.00**	3/16	1A	N°	8 1/8	5 9/16	500.0
30.0	29.8	**12-8V30.00**	**3380.00**	1/4	1A	P°	9 3/8	4 1/4	616.0
35.5	35.3	**12-8V35.50**	**3660.00**	1/4	1A	P°	9 3/8	4 1/4	775.0
40.0	39.8	**12-8V40.00**	**5000.00**	1/4	1A	P°	9 3/8	4 1/4	890.0
44.5	44.3	**12-8V44.50**	**6500.00**	1/4	1A	P°	9 3/8	4 1/4	1058.0
53.0	52.8	**12-8V53.00**	**8000.00**	5/8	1A	W°	11 3/8	1 7/8	1485.0
58.0	57.8	**12-8V58.00**	**9000.00**	5/8	1A	W°	11 3/8	1 7/8	1590.0
63.0	62.8	**12-8V63.00**	**10000.00**	5/8	1A	W°	11 3/8	1 7/8	1722.0
71.0	70.8	**12-8V71.00**	**13000.00**	5/8	1A	W°	11 3/8	1 7/8	2200.0
Large Hub Series									
35.5	35.3	**12-8V35.5WOFO**	**4,900.00**	2 5/8	6A	W°	11 3/8	5 1/8	962
40.0	39.8	**12-8V40.0WOFO**	**6,300.00**	2 5/8	6A	W°	11 3/8	5 1/8	1052
44.5	44.3	**12-8V44.5WOFO**	**8,100.00**	2 5/8	6A	W°	11 3/8	5 1/8	1125

P.D. for "8V" Belts = O.D.
°Note: M-N-P-W bushings are standard mounting only for these parts. See page 9 for installation instructions.

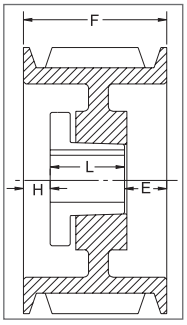

TYPE 1

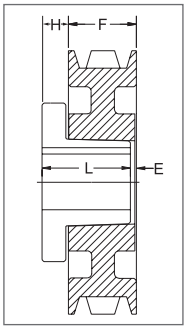

TYPE 6

SYNCHRONOUS DRIVE COMPONENTS

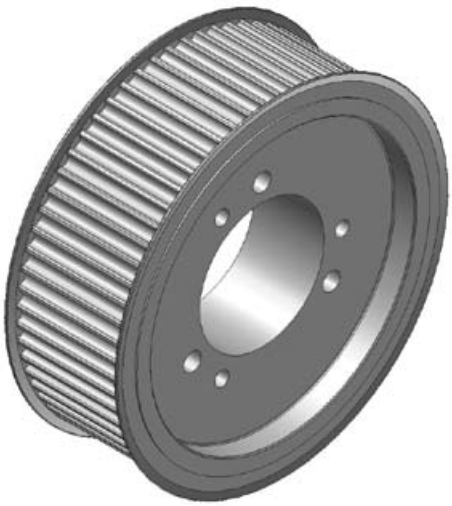

Synchronous components ensure an engaged drive that does not slip due to the enmeshing of the grooves with the matching belts. In comparison with chain drives, the speed range is more than twice as high while retaining high belt efficiency.

DID YOU KNOW THAT...

- No loss of speed caused by belt slippage
- Non-stretch drives — do not require readjustment with use
- No jerking or vibration compared to chain drives
- Do not require lubrication, no metal-to-metal contact
- Very high mechanical efficiency
- Overall costs can be lower based on all factors involved, such as maintenance and power needs.

IMPORTANT REMINDER

Synchronous Belts are most suitable for areas when proper maintenance is difficult or where downtime could prove to be extremely expensive, like chain drives.

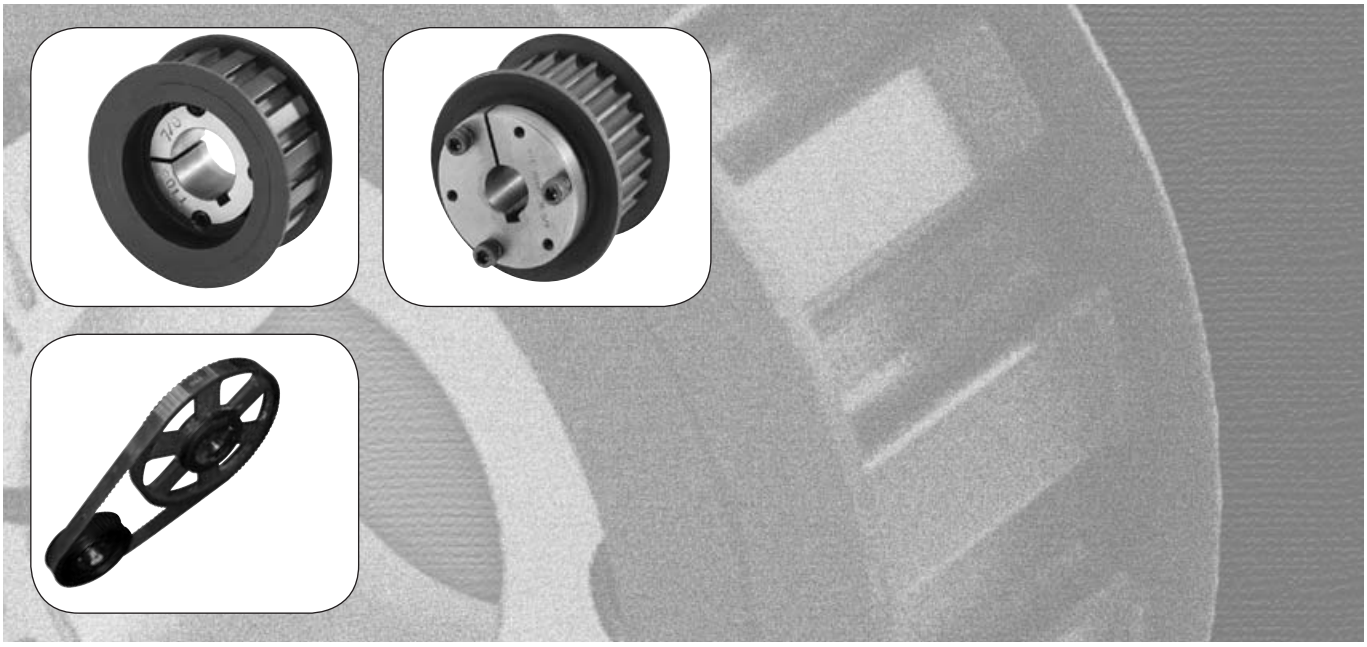

TIMING PULLEY

DID YOU KNOW THAT...

- All parts are completely machined in cast iron; some parts made from steel
- Synchronized no-slip transmission
- No lubrication required
- **Compact design**, high efficiency
- Low maintenance, economical operations

IMPORTANT REMINDER

Baldor double taper-style timing pulleys are no longer being manufactured. They will be gradually replaced by the more conventional single taper model (equivalent compatible products).

HOW TO ORDER

EXAMPLE: **P30H300-2012**

P30	H	300	2012	PB

P30: NUMBER OF TEETH (30)

H: TOOTH PITCH (1/2’’)

300: TIMING BELT WIDTH (3.00’’)

2012: HUB SIZE RELATES TO THE TAPER LOCK BUSHING.

PB: INDICATES AVAILABLE IN PLAIN BORE

1. All Charts: The type of sheave construction is indicated in the column entitled « T ». The number refers to the drawing and the letter as follows: A = arms; B = block; W = web; F = flanges

2. All dimensions are to the closest fraction.

3. Weight for all items is approximate.

XL PITCH

DIMENSIONS

Part No	List Price $	Bushing	Number of Teeth	Diameters				Type	Dimensions (inches)				Bore Range		Wt
				Pitch Diam.	O.D. Sprocket	O.D. Flange	I.D.		K	M	N	H	Min.	Max.	
For Belts 1/4", 5/16" & 3/8" wide - 1/5" pitch (XL037) - Face width (F) = 9/16"															
P10XL037-PB	9.00	…	10	0.637	0.617	0.91	…	3B F	1/4	…	…	1/2	3/16	1/4*	0.05
P11XL037-PB	9.40	…	11	0.700	0.680	0.91	…	3B F	1/4	…	…	1/2	3/16	1/4*	0.05
P12XL037-PB	9.80	…	12	0.764	0.744	0.98	…	3B F	1/4	…	…	1/2	3/16	5/16*	0.07
P14XL037-PB	11.70	…	14	0.891	0.871	1.10	…	3B F	1/4	…	…	9/16	1/4	3/8*	0.09
P15XL037-PB	12.10	…	15	0.955	0.935	1.10	…	3B F	1/4	…	…	5/8	1/4	7/16*	0.10
P16XL037-PB	12.80	…	16	1.019	0.999	1.26	…	3B F	1/4	…	…	11/16	1/4	1/2*	0.12
P18XL037-PB	14.30	…	18	1.146	1.126	1.38	…	3B F	1/4	…	…	13/16	1/4	9/16*	0.16
P20XL037-PB	15.10	…	20	1.273	1.253	1.50	…	3B F	11/32	…	…	15/16	1/4	11/16*	0.21
P21XL037-PB	16.20	…	21	1.337	1.317	1.50		3B F	11/32	…	…	15/16	1/4	11/16*	0.23
P22XL037-PB	16.60	…	22	1.401	1.381	1.61	…	3B F	11/32	…	…	1	1/4	3/4*	0.26
P24XL037-PB	18.50	…	24	1.528	1.508	1.73	…	3B F	11/32	…	…	1 1/16	1/4	13/16*	0.31
P28XL037-PB	21.10	…	28	1.783	1.763	2.01	…	3B F	11/32	…	…	1 3/16	1/4	15/16*	0.42
P30XL037-PB	22.20	…	30	1.910	1.890	2.13	…	3B F	11/32	…	…	1 3/8	5/16	1 1/16*	0.41
P32XL037-PB	22.60	…	32	2.037	2.017	…	…	3B	7/16	…	…	1 1/2	5/16	1 3/16*	0.63
P36XL037-PB	23.00	…	36	2.292	2.272	…	…	3B	7/16	…	…	1 1/2	5/16	1 3/16*	0.74
P40XL037-PB	23.40	…	40	2.546	2.526	…	…	3B	7/16	…	…	1 1/2	5/16	1 3/16*	0.88
P42XL037-PB	23.80	…	42	2.674	2.654	…	…	3B	7/16	…	…	1 1/2	5/16	1 3/16*	0.96
P44XL037-PB	24.50	…	44	2.801	2.781	…	…	3B	7/16	…	…	1 1/2	5/16	1 3/16*	1.03
P48XL037-PB	26.00	…	48	3.056	3.036	…	…	3B	7/16	…	…	1 1/2	5/16	1 3/16*	1.20
P60XL037-PB	31.30	…	60	3.820	3.800	…	…	3B	7/16	…	…	1 1/2	3/8	1 3/16*	1.78
P72XL037-PB	39.20	…	72	4.584	4.564	…	…	3B	7/16	…	…	1 1/2	3/8	1 3/16*	2.51
**P32XL037-1108	27.50	1108	32	2.037	2.017	…	…	2B	0	25/32	…	…	1/2	1 1/8	0.25
**P36XL037-1108	28.40	1108	36	2.292	2.272	…	…	2B	0	25/32	…	…	1/2	1 1/8	0.38
P40XL037-1108	29.50	1108	40	2.546	2.526	…	…	2B	7/32	25/32	…	2 5/32	1/2	1 1/8	0.57
P42XL037-1108	31.10	1108	42	2.674	2.654	…	…	2B	7/32	25/32	…	2 17/64	1/2	1 1/8	0.67
P44XL037-1108	32.50	1108	44	2.801	2.781	…	…	2B	7/32	25/32	…	2 11/32	1/2	1 1/8	0.77
P48XL037-1108	35.90	1108	48	3.056	3.036	…	…	2B	7/32	25/32	…	2 19/32	1/2	1 1/8	0.99
P60XL037-1210	37.50	1210	60	3.820	3.800	…	…	2B	7/16	63/64	…	3 13/32	1/2	1 1/4	2.02
P72XL037-1610	39.10	1610	72	4.584	4.564	…	…	2B	7/16	63/64	…	4	1/2	1 11/16	2.86

*Available from stock in min. plain bore. Max. bore is w/o keyway. (If keyway is used, reduce max. bore listed by twice the keyway depth.) ((Two hex-socket set screws furnished @ 90 degrees are included in price of pulley.))
**These parts are made of steel

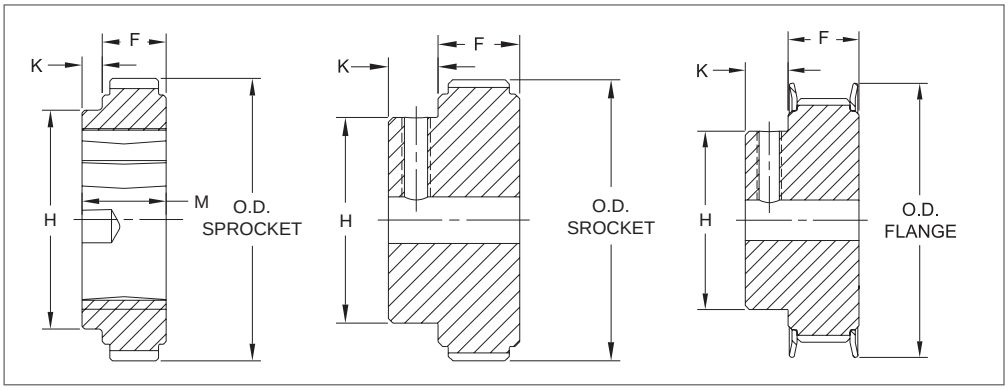

TYPE 2 TYPE 3 TYPE 3F

L PITCH

DIMENSIONS

Part No	List Price $	Bushing	Number of Teeth	Diameters				Type	Dimensions (inches)				Bore Range		Wt
				Pitch Diam.	O.D. Sprocket	O.D. Flange	I.D.		K	M	N	H	Min.	Max.	
For belts 1/2" wide - 3/8" pitch (L050) - Face Width (F) = 3/4"															
P10L050-PB	14.60	…	10	1.194	1.164	1.46	…	3B F	1/2	…	…	7/8	3/8	*1/2	0.20
P12L050-PB	16.10	…	12	1.432	1.402	1.69	…	3B F	1/2	…	…	1 1/8	3/8	*3/4	0.34
P13L050-PB	17.00	…	13	1.552	1.522	1.73	…	3B F	1/2	…	…	1 7/32	3/8	*3/4	0.42
P14L050-PB	18.80	…	14	1.671	1.641	1.89	…	3B F	1/2	…	…	1 5/16	3/8	*7/8	0.48
P15L050-PB	19.20	…	15	1.790	1.760	2.01	…	3B F	1/2	…	…	1 3/8	1/2	*7/8	0.53
P16L050-PB	20.60	…	16	1.910	1.880	2.13	…	3B F	1/2	…	…	1 1/2	1/2	*1	0.62
P17L050-PB	21.80	…	17	2.029	1.999	2.24	…	3B F	1/2	…	…	1 1/2	1/2	*1	0.70
P18L050-1108	27.50	1108	18	2.149	2.119	2.38	…	2B F	1/32	25/32	…	1 49/64	1/2	1 1/8	0.40
P20L050-1108	28.40	1108	20	2.387	2.357	2.64	…	2B F	1/32	25/32	…	2	1/2	1 1/8	0.55
P21L050-1108	29.10	1108	21	2.507	2.477	2.76	…	2B F	1/32	25/32	…	1 31/32	1/2	1 1/8	0.65
P22L050-1108	29.50	1108	22	2.626	2.596	2.95	…	2B F	1/32	25/32	…	2 11/64	1/2	1 1/8	0.75
**P24L050-1210	31.10	1210	24	2.865	2.835	3.13	…	2B F	15/64	63/64	…	2 9/32	1/2	11/4	0.90
P26L050-1210	32.50	1210	26	3.104	3.074	3.40	…	2B F	15/64	63/64	…	2 9/16	1/2	11/4	1.10
P28L050-1210	34.80	1210	28	3.342	3.312	3.59	…	2B F	15/64	63/64	…	2 9/16	1/2	11/4	1.30
**P30L050-1610	35.00	1610	30	3.581	3.551	3.83	…	2B F	15/64	63/64	…	2 3/4	1/2	1 11/16	1.40
P32L050-1610	53.90	1610	32	3.820	3.790	4.04	…	2B F	15/64	63/64	…	2 29/32	1/2	1 11/16	1.65
P40L050-2012	58.50	2012	40	4.775	4.745	5.05	…	2B F	7/16	1 3/16	…	3 13/16	1/2	2 1/8	3.00
P48L050-2012	68.60	2012	48	5.730	5.700	5.91	…	2B F	7/16	1 3/16	…	3 15/16	1/2	2 1/8	4.55
P60L050-2012	75.80	2012	60	7.162	7.132	…	…	2W	7/16	1 3/16	…	4 11/64	1/2	2 1/8	6.15
P72L050-2012	81.50	2012	72	8.594	8.564	…	…	2W	7/16	1 3/16	…	4 11/64	1/2	2 1/8	9.55
P84L050-2517	93.70	2517	84	10.027	9.997	…	…	2W	1 1/64	1 49/64	…	4 11/16	1/2	2 11/16	13.75

*Available from stock in min. plain bore only. Max. bore is without keyway. (If keyway is used, reduce max. bore listed by twice the keyway depth.)
**These parts are made of steel

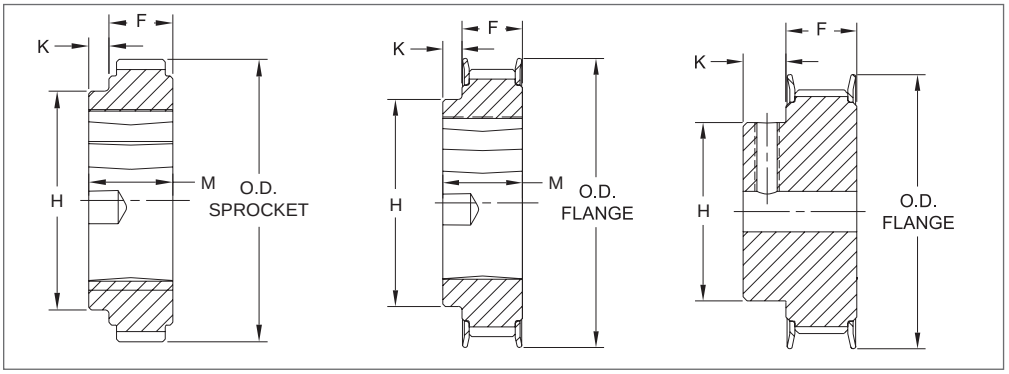

TYPE 2 TYPE 2F TYPE 3F

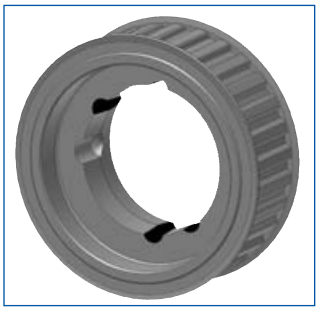

L PITCH

DIMENSIONS

Part No	List Price $	Bushing	Number of Teeth	Diameters				Type	Dimensions (inches)				Bore Range		Wt
				Pitch Diam.	O.D. Sprocket	O.D. Flange	I.D.		K	M	N	H	Min.	Max.	
For Belts 3/4" wide - 3/8" pitch (L075) - Face width (F) = 1"															
P12L075-PB	19.50	…	12	1.432	1.402	1.69	…	3B F	1/2	…	…	1 1/8	3/8	*3/4	0.43
P13L075-PB	19.90	…	13	1.552	1.522	1.73	…	3B F	1/2	…	…	1 7/32	3/8	*3/4	0.50
P14L075-PB	21.30	…	14	1.671	1.641	1.89	…	3B F	1/2	…	…	1 5/16	3/8	*7/8	0.53
P15L075-PB	22.00	…	15	1.790	1.760	2.01	…	3B F	1/2	…	…	1 3/8	1/2	*7/8	0.60
P16L075-PB	22.80	…	16	1.910	1.880	2.13	…	3B F	1/2	…	…	1 1/2	1/2	*1	0.70
P17L075-PB	24.00	…	17	2.029	1.999	2.24	…	3B F	1/2	…	…	1 1/2	1/2	*1	0.80
P18L075-1108	29.10	1108	18	2.149	2.119	2.38	1.60	1B F	13/64	25/32	0	…	1/2	1 1/8	0.45
P20L075-1108	30.50	1108	20	2.387	2.357	2.64	1.77	1B F	13/64	25/32	0	…	1/2	1 1/8	0.65
P22L075-1108	33.20	1108	22	2.626	2.596	2.95	1.89	1B F	13/64	25/32	0	…	1/2	1 1/8	0.90
P24L075-1210	34.80	1210	24	2.865	2.835	3.13	…	2B F	0	63/64	…	…	1/2	1 1/4	0.90
P26L075-1210	36.80	1210	26	3.104	3.074	3.40	…	2B F	0	63/64	…	…	1/2	1 1/4	1.25
P28L075-1610	39.50	1610	28	3.342	3.312	3.59	…	2B F	0	63/64	…	…	1/2	1 11/16	1.20
P30L075-1610	42.50	1610	30	3.581	3.551	3.83	…	2B F	0	63/64	…	…	1/2	1 11/16	1.85
P32L075-1610	45.20	1610	32	3.820	3.790	4.04	…	2B F	0	63/64	…	…	1/2	1 11/16	1.85
P40L075-2012	62.50	2012	40	4.775	4.745	5.05	…	2B F	13/64	1 3/16	…	3 13/16	1/2	2 1/8	3.30
P48L075-2012	71.70	2012	48	5.730	5.700	5.91	…	2B F	13/64	1 3/16	…	3 15/16	1/2	2 1/8	5.35
P60L075-2012	82.20	2012	60	7.162	7.132	…	…	2W	13/64	1 3/16	…	4 11/64	1/2	2 1/8	6.45
P72L075-2012	89.20	2012	72	8.594	8.564	…	…	2W	13/64	1 3/16	…	4 11/64	1/2	2 1/8	9.70
P84L075-2517	109.60	2517	84	10.027	9.997	...	…	2W	25/32	1 49/64	…	4 11/16	1/2	2 11/16	14.55

*Available from stock in min. plain bore only. Max. bore is without keyway. (If keyway is used, reduce max. bore listed by twice the keyway depth.)

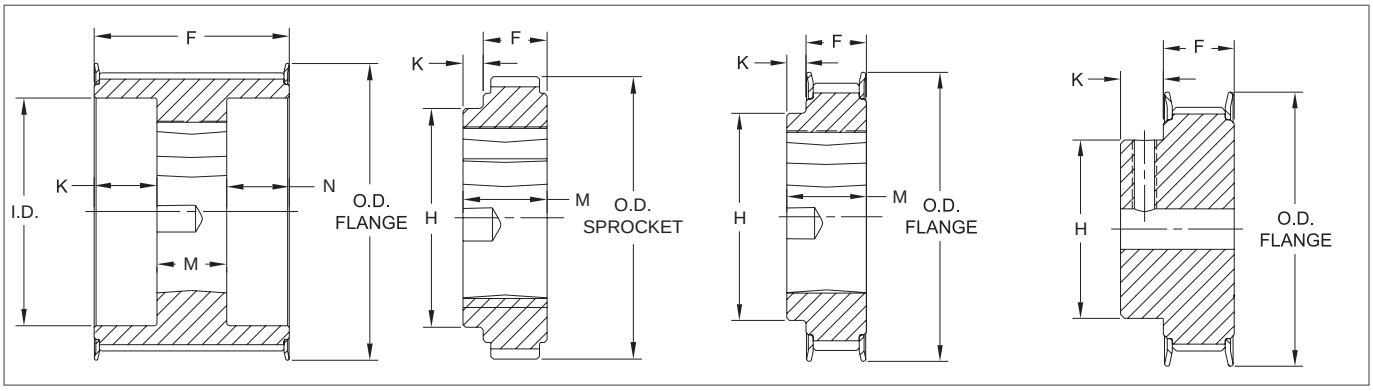

TYPE 1F TYPE 2 TYPE 2F TYPE 3F

L PITCH

DIMENSIONS

Part No	List Price $	Bushing	Number of Teeth	Diameters				Type	Dimensions (inches)				Bore Range		Wt
				Pitch Diam.	O.D. Sprocket	O.D. Flange	I.D.		K	M	N	H	Min.	Max.	
For Belts 1" wide - 3/8" pitch (L100) - Face width (F) = 1 1/4"															
P13L100-PB	22.50	…	13	1.552	1.522	1.73	…	3B F	1/2	…	…	1 7/32	3/8	*3/4	0.60
P14L100-PB	23.30	…	14	1.671	1.641	1.89	…	3B F	1/2	…	…	1 5/16	3/8	*7/8	0.65
P15L100-PB	24.00	…	15	1.790	1.760	2.01	…	3B F	1/2	…	…	1 3/8	1/2	*7/8	0.74
P16L100-PB	24.80	…	16	1.910	1.880	2.13	…	3B F	1/2	…	…	1 1/2	1/2	*1	0.80
P17L100-PB	26.30	…	17	2.029	1.999	2.24	…	3B F	1/2	…	…	1 1/2	1/2	*1	1.00
P18L100-1108	32.00	1108	18	2.149	2.119	2.38	1.60	1B F	15/32	25/32	0	…	1/2	1 1/8	0.55
P20L100-1108	33.60	1108	20	2.387	2.357	2.64	1.77	1B F	15/32	25/32	0	…	1/2	1 1/8	0.80
P22L100-1108	36.40	1108	22	2.626	2.596	2.95	1.89	1B F	15/32	25/32	0	…	1/2	1 1/8	1.05
P24L100-1210	37.50	1210	24	2.865	2.835	3.13	2.24	1B F	9/32	63/64	0	…	1/2	1 1/4	1.25
P26L100-1210	40.00	1210	26	3.104	3.074	3.40	2.36	1B F	9/32	63/64	0	…	1/2	1 1/4	1.45
P28L100-1610	42.50	1610	28	3.342	3.312	3.59	2.54	1B F	9/32	63/64	0	…	1/2	1 11/16	1.45
P30L100-1610	46.10	1610	30	3.581	3.551	3.83	2.80	1B F	9/32	63/64	0	…	1/2	1 11/16	1.75
P32L100-1610	49.80	1610	32	3.820	3.790	4.04	2.95	1B F	9/32	63/64	0	…	1/2	1 11/16	2.15
P40L100-2012	67.90	2012	40	4.775	4.745	5.05	3.78	1B F	5/64	1 3/16	0	…	1/2	2 1/8	3.75
P48L100-2012	78.80	2012	48	5.730	5.700	5.91	4.72	1B F	5/64	1 3/16	0	…	1/2	2 1/8	6.10
P60L100-2012	92.70	2012	60	7.162	7.132	…	6.54	1W	5/64	1 3/16	0	…	1/2	2 1/8	6.95
P72L100-2012	112.20	2012	72	8.594	8.564	…	7.95	1W	5/64	1 3/16	0	…	1/2	2 1/8	10.60
P84L100-2517	128.70	2517	84	10.027	9.997	…	…	2W	33/64	1 49/64	…	4 11/16	1/2	2 11/16	15.15

*Available from stock in min. plain bore. Max. bore is w/o keyway. (If keyway is used, reduce max. bore listed by twice the keyway depth.)

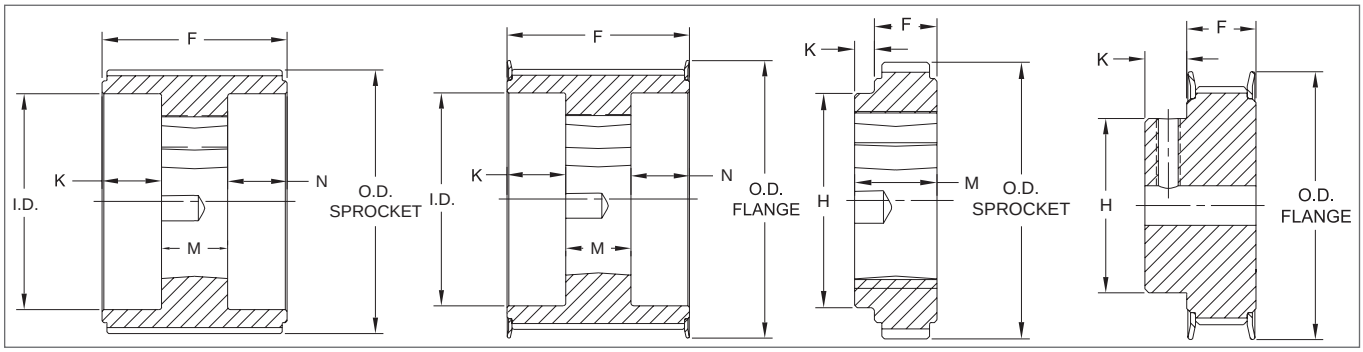

TYPE 1 TYPE 1F TYPE 2 TYPE 3F

H PITCH

DIMENSIONS

Part No	List Price $	Bushing	Number of Teeth	Diameters				Type	Dimensions (inches)				Bore Range		Wt
				Pitch Diam.	O.D. Sprocket	O.D. Flange	I.D.		K	M	N	H	Min.	Max.	
For Belts 1" wide - 1/2" pitch (H100) - Face width (F) = 1 1/4"															
*P14H100-1108	32.50	1108	14	2.228	2.174	2.52	1.60	1B F	7/16	25/32	0	…	1/2	1 1/8	0.70
*P16H100-1108	35.50	1108	16	2.546	2.492	2.77	1.77	1B F	7/16	25/32	0	…	1/2	1 1/8	0.90
*P18H100-1210	37.50	1210	18	2.865	2.811	3.12	2.24	1B F	15/64	63/64	0	…	1/2	1 1/4	1.00
*P20H100-1210	41.10	1210	20	3.183	3.129	3.40	2.36	1B F	15/64	63/64	0	…	1/2	1 1/4	1.45
P22H100-1610	48.90	1610	22	3.501	3.447	3.70	2.64	1B F	9/32	63/64	0	…	1/2	1 11/16	1.60
P24H100-1610	54.30	1610	24	3.820	3.766	4.04	2.89	1B F	9/32	63/64	0	…	1/2	1 11/16	2.10
P26H100-2012	62.00	2012	26	4.138	4.084	4.41	3.23	1B F	5/64	1 3/16	0	…	1/2	2 1/8	2.25
P28H100-2012	66.10	2012	28	4.456	4.402	4.74	3.56	1B F	5/64	1 3/16	0	…	1/2	2 1/8	2.95
P30H100-2012	69.70	2012	30	4.775	4.721	5.04	3.86	1B F	5/64	1 3/16	0	…	1/2	2 1/8	3.60
P32H100-2517	69.70	2517	32	5.093	5.039	5.32	…	2B F	33/64	1 49/64	…	4 11/64	1/2	2 11/16	4.20
P40H100-2517	92.30	2517	40	6.366	6.312	6.63	…	2W F	33/64	1 49/64	…	4 11/16	1/2	2 11/16	7.40
P48H100-2517	119.70	2517	48	7.639	7.585	7.87	…	2W F	33/64	1 49/64	…	4 11/16	1/2	2 11/16	9.95
**P60H100-3020	163.40	3020	60	9.549	9.495	…	…	2W	5/8	1 31/32	…	2 29/32	7/8	3 1/4	16.45
**P72H100-3020	166.60	3020	72	11.459	11.405	…	…	2W	5/8	1 31/32	…	5 29/32	7/8	3 1/4	22.75
**P84H100-3020	205.60	3020	84	13.369	13.315	…	…	2W	5/8	1 31/32	…	5 29/32	7/8	3 1/4	29.90
**P96H100-3020	256.60	3020	96	15.279	15.225	…	…	2A	5/8	1 31/32	…	5 29/32	7/8	3 1/4	28.75
**P120H100-3020	411.60	3020	120	19.099	19.045	…	…	2A	5/8	1 31/32	…	5 29/32	7/8	3 1/4	42.25

* Face width (F) = 1 7/32" ** Face width (F) = 1 11/32"

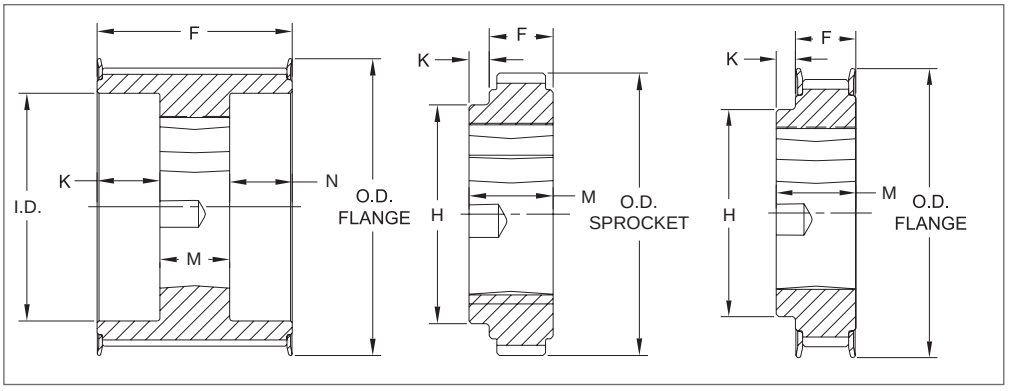

TYPE 1F TYPE 2 TYPE 2F

BALDOR
A MEMBER OF THE ABB GROUP

H PITCH

DIMENSIONS

Part No	List Price $	Bushing	Number of Teeth	Diameters				Type	Dimensions (inches)				Bore Range		Wt
				Pitch Diam.	O.D. Sprocket	O.D. Flange	I.D.		K	M	N	H	Min.	Max.	
For Belts 1 1/2" wide - 1/2" pitch (H150) - Face width (F) = 1 3/4"															
P14H150-1108	43.20	1108	14	2.228	2.174	2.52	1.60	1B F	63/64	25/32	0	…	1/2	1 1/8	0.80
P16H150-1108	47.30	1108	16	2.546	2.492	2.77	1.77	1B F	63/64	25/32	0	…	1/2	1 1/8	1.20
P18H150-1210	48.90	1210	18	2.865	2.811	3.12	2.24	1B F	25/32	63/64	0	…	1/2	1 1/4	1.30
P20H150-1210	54.50	1210	20	3.183	3.129	3.40	2.36	1B F	25/32	63/64	0	…	1/2	1 1/4	1.85
P22H150-1610	61.10	1610	22	3.501	3.447	3.70	2.64	1B F	25/32	63/64	0	…	1/2	1 11/16	2.10
P24H150-2012	66.10	2012	24	3.820	3.766	4.04	3.13	1B F	19/32	1 3/16	0	…	1/2	2 1/8	2.05
P26H150-2012	73.40	2012	26	4.138	4.084	4.41	3.23	1B F	19/32	1 3/16	0	…	1/2	2 1/8	2.80
P28H150-2012	77.50	2012	28	4.456	4.402	4.74	3.56	1B F	19/32	1 3/16	0	…	1/2	2 1/8	3.50
P30H150-2012	81.80	2012	30	4.775	4.721	5.04	3.86	1B F	19/32	1 3/16	0	…	1/2	2 1/8	4.30
P32H150-2517	82.90	2517	32	5.093	5.039	5.32	…	2B F	0	1 49/64	…	…	1/2	2 11/16	4.90
P40H150-2517	107.70	2517	40	6.366	6.312	6.63	…	2W F	0	1 49/64	…	…	1/2	2 11/16	8.20
P48H150-2517	138.90	2517	48	7.639	7.585	7.87	…	2W F	0	1 49/64	…	…	1/2	2 11/16	11.25
P60H150-3020	153.40	3020	60	9.549	9.495	…	…	2W	13/64	1 31/32	…	6 19/64	7/8	3 1/4	10.80
P72H150-3020	193.10	3020	72	11.459	11.405	…	…	2W	13/64	1 31/32	…	6 19/64	7/8	3 1/4	25.20
P84H150-3020	240.50	3020	84	13.369	13.315	…	…	2W	13/64	1 31/32	…	6 19/64	7/8	3 1/4	32.40
P96H150-3020	304.80	3020	96	15.279	15.225	…	…	2A	13/64	1 31/32	…	6 19/64	7/8	3 1/4	31.52
P120H150-3020	499.80	3020	120	19.099	19.045	…	…	2A	13/64	1 31/32	…	6 19/64	7/8	3 1/4	46.50

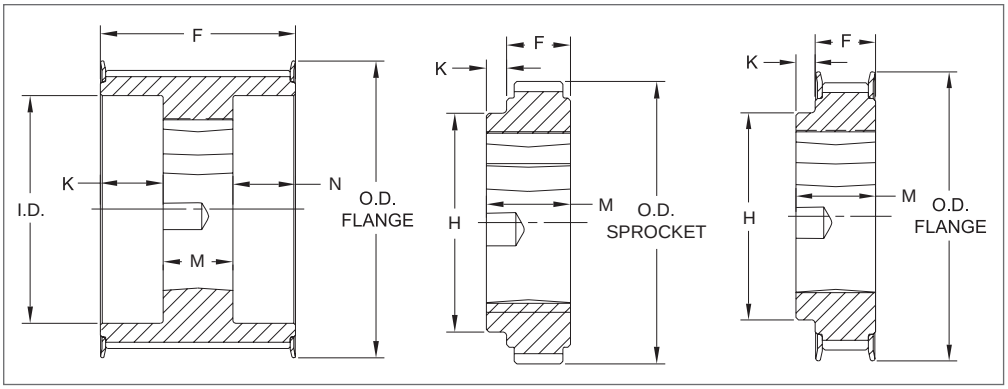

TYPE 1F TYPE 2 TYPE 2F

SYNCHRONOUS DRIVES

H PITCH

DIMENSIONS

Part No	List Price $	Bushing	Number of Teeth	Diameters				Type	Dimensions (inches)				Bore Range		Wt
				Pitch Diam.	O.D. Sprocket	O.D. Flange	I.D.		K	M	N	H	Min.	Max.	
For Belts 2" wide - 1/2" pitch (H200) - Face width (F) = 2 9/32"															
P16H200-1108	60.00	1108	16	2.546	2.492	2.77	1.77	1B F	1 1/2	25/32	0	…	1/2	1 1/8	1.50
P18H200-1210	62.70	1210	18	2.865	2.811	3.12	2.24	1B F	1 19/64	63/64	0	…	1/2	1 1/4	1.50
P20H200-1210	69.30	1210	20	3.183	3.129	3.40	2.36	1B F	1 19/64	63/64	0	…	1/2	1 1/4	2.30
P22H200-1610	71.80	1610	22	3.501	3.447	3.70	2.64	1B F	1 19/64	63/64	0	…	1/2	1 11/16	2.55
P24H200-2012	76.60	2012	24	3.820	3.766	4.04	3.15	1B F	1 7/64	1 3/16	0	…	1/2	2 1/8	2.45
P26H200-2012	83.20	2012	26	4.138	4.084	4.41	3.23	1B F	1 7/64	1 3/16	0	…	1/2	2 1/8	3.40
P28H200-2012	88.90	2012	28	4.456	4.402	4.74	3.56	1B F	1 7/64	1 3/16	0	…	1/2	2 /18	4.15
P30H200-2012	95.00	2012	30	4.775	4.721	5.04	3.86	1B F	1 7/64	1 3/16	0	…	1/2	2 1/8	4.90
P32H200-2517	97.90	2517	32	5.093	5.039	5.32	4.17	1B F	33/64	1 49/64	0	…	1/2	2 11/16	5.75
P40H200-2517	142.00	2517	40	6.366	6.312	6.63	5.43	1W F	33/64	1 49/64	0	…	1/2	2 11/16	9.30
P48H200-3020	191.80	3020	48	7.639	7.585	7.87	6.65	1B F	5/16	1 31/32	0	…	7/8	3 1/4	16.40
*P60H200-3020	205.40	3020	60	9.549	9.495	…	8.78	1W	25/64	1 31/32	0	…	7/8	3 1/4	20.10
*P72H200-3020	258.40	3020	72	11.459	11.405	…	10.62	1W	25/64	1 31/32	0	…	7/8	3 1/4	27.15
*P84H200-3020	292.80	3020	84	13.369	13.315	…	12.60	1W	25/64	1 31/32	0	…	7/8	3 1/4	34.62
*P96H200-3535	352.70	3535	96	15.279	15.225	…	…	2A	1 9/64	3 1/2	…	7 1/64	1 3/16	3 15/16	43.95
*P120H200-3535	587.70	3535	120	19.099	19.045	…	…	2A	1 9/64	3 1/2	…	7 1/64	1 3/16	3 15/16	58.92

*Face width (F) = 2 11/32"

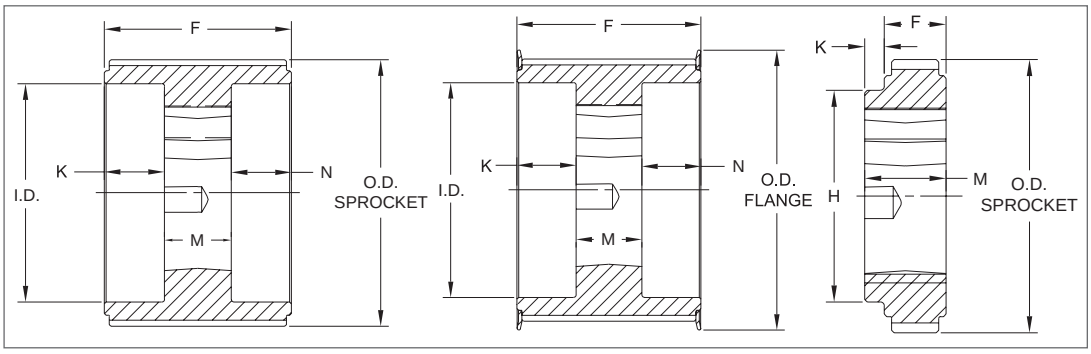

TYPE 1 TYPE 1F TYPE 2

H PITCH

DIMENSIONS

Part No	List Price $	Bushing	Number of Teeth	Diameters				Type	Dimensions (inches)				Bore Range		Wt
				Pitch Diam.	O.D. Sprocket	O.D. Flange	I.D.		K	M	N	H	Min.	Max.	
For Belts 3" wide - 1/2" pitch (H300) - Face width (F) = 3 5/16"															
P16H300-1108	79.70	1108	16	2.546	2.492	2.77	1.82	1B F	1 17/64	25/32	1 17/64	…	1/2	1 1/8	2.00
P18H300-1210	88.60	1210	18	2.865	2.811	3.12	2.24	1B F	1 5/32	63/64	1 5/32	…	1/2	1 1/4	2.05
P20H300-1210	107.70	1210	20	3.183	3.129	3.40	2.36	1B F	1 5/32	63/64	1 5/32	…	1/2	1 1/4	3.05
P22H300-1610	106.80	1610	22	3.501	3.447	3.70	2.64	1B F	1 5/32	63/64	1 5/32	…	1/2	1 11/16	3.50
P24H300-2012	114.30	2012	24	3.820	3.766	4.04	2.95	1B F	1 1/16	1 3/16	1 1/16	…	1/2	2 1/8	4.05
P26H300-2012	120.70	2012	26	4.138	4.084	4.41	3.23	1B F	1 1/16	1 3/16	1 1/16	…	1/2	2 1/8	4.60
P28H300-2012	127.30	2012	28	4.456	4.402	4.74	3.56	1B F	1 1/16	1 3/16	1 1/16	…	1/2	2 1/8	5.40
P30H300-2012	140.50	2012	30	4.775	4.721	5.04	3.86	1B F	1 1/16	1 3/16	1 1/16	…	1/2	2 1/8	6.45
P32H300-2517	148.80	2517	32	5.093	5.039	5.32	4.17	1B F	49/64	1 49/64	49/64	…	1/2	2 11/16	7.25
P40H300-2517	184.20	2517	40	6.366	6.312	6.63	5.43	1W F	1 17/32	1 49/64	0	…	1/2	2 11/16	11.40
**P48H300-3020	254.90	3020	48	7.639	7.585	7.87	6.65	1B F	1 27/64	1 31/32	0	…	7/8	3 1/4	19.25
**P60H300-3020	254.50	3020	60	9.549	9.495	…	8.78	1W	1 27/64	1 31/32	0	…	7/8	3 1/4	22.60
**P72H300-3020	332.00	3020	72	11.459	11.405	…	10.62	1W	1 27/64	1 31/32	0	…	7/8	3 1/4	30.70
**P84H300-3020	412.60	3020	84	13.369	13.315	…	12.60	1W	1 27/64	1 31/32	0	…	7/8	3 1/4	37.45
**P96H300-3535	494.20	3535	96	15.279	15.225	…	…	2A	1/8	3 1/2	...	7 1/64	1 3/16	3 15/16	51.84
**P120H300-3535	704.80	3535	120	19.099	19.045	…	…	2A	1/8	3 1/2	...	7 1/64	1 3/16	3 15/16	75.08

** Face width (F) = 3 3/8"

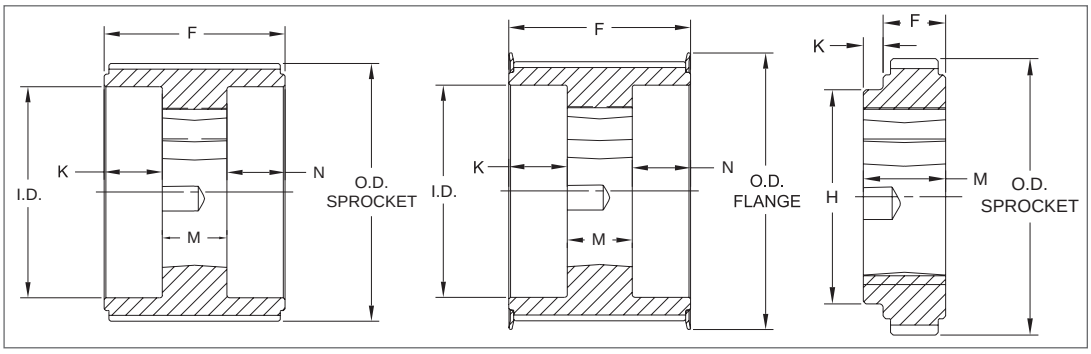

TYPE 1 TYPE 1F TYPE 2

SYNCHRONOUS DRIVES

HTD SPROCKET

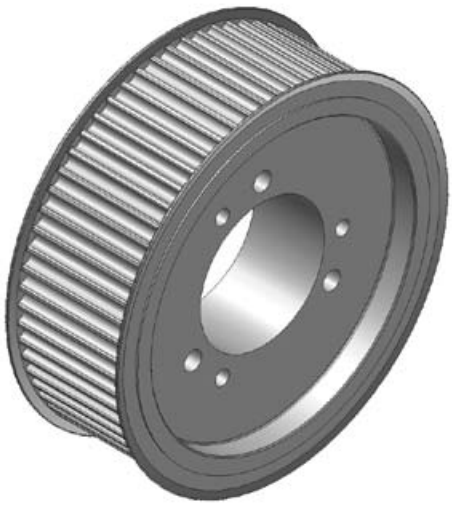

HTD synchronous belt drives combine the positive timing action of gears with the flexibility, speed and low noise level of belts. Baldor•Maska HTD sprockets are manufactured in various sizes, dimensions and capacities to meet industry requirements -- from speeds as low as 10 RPM to speeds over 5,000 RPM and horsepower ratings from fractional to more than 250 HP.

DID YOU KNOW THAT...

- All parts are completely machined in cast iron; some parts made from steel
- Positive, non-slip drive
- No lubrication necessary, non-stretch
- Smooth operation: no chain drive that results in vibration and speed variation
- Clean operation, long-life expectancy, low maintenance
- Quiet; no metal-to-metal contact

IMPORTANT REMINDER

- **Baldor does not recommend using HTD sprockets with QD bushings that do not have a keyseat.**
- **The synchronous sprockets detailed in the following tables are all stock sizes. All dimensions include the sprocket with the QD bushing in place and are in inches.**

HOW TO ORDER

EXAMPLE: **P64-8M-50-SK**

P64	8M	50	SK

P64: NUMBER OF TEETH (64)
8M: TOOTH PITCH (8mm)
50: HIGH TORQUE BELT WIDTH (50mm)
SK: HUB SIZE RELATED TO QD BUSHING

1. All Charts: The type of sheave construction is indicated in the column entitled « T ». The number refers to the drawing and the letter as follows: A = arms; B = block; W = web; F = flanges

2. All dimensions are to the closest fraction.

3. Weight for all items is approximate.

BALDOR
A MEMBER OF THE ABB GROUP

8 MM PITCH X 20 MM

DIMENSIONS

Part No	List Price $	Bushing	Number of Teeth	Diameters				Type	Dimensions (inches)				Bore Range		Wt
				Pitch Diam.	O.D. Sprocket	O.D. Flange	I.D.		E	K	L	M	Min.	Max.	
For Belts 3/4" (20mm) wide - 8mm pitch (8M-20) - Face width (F) = 1 1/8"															
*P24-8M-20-JA	53.00	JA	24	2.406	2.352	2.60	1.34	1B F	33/64	…	1	41/64	1/2	1 1/4	0.85
P26-8M-20-JA	54.00	JA	26	2.607	2.553	2.76	1.34	1B F	33/64	…	1	41/64	1/2	1 1/4	0.95
*P28-8M-20-L	55.00	L	28	2.807	2.759	3.11	1.60	1B F	17/32	…	1 11/32	5/16	1/2	1 1/2	1.15
P30-8M-20-L	57.00	L	30	3.008	2.958	3.25	1.60	1B F	17/32	…	1 11/32	5/16	1/2	1 1/2	1.40
P32-8M-20-L	59.00	L	32	3.208	3.156	3.43	2.56	2B F	5/16	7/32	1 11/32	3/32	1/2	1 1/2	1.35
P34-8M-20-SH	60.00	SH	34	3.409	3.355	3.58	2.75	2B F	1/4	3/8	1 1/4	1/8	1/2	1 11/16	1.30
P36-8M-20-SH	62.00	SH	36	3.609	3.555	4.02	2.82	2B F	1/4	3/8	1 1/4	1/8	1/2	1 11/16	1.65
P38-8M-20-SH	64.00	SH	38	3.810	3.756	4.17	3.00	2B F	1/4	3/8	1 1/4	1/8	1/2	1 11/16	1.85
P40-8M-20-SH	68.00	SH	40	4.010	3.956	4.41	3.00	2B F	1/4	3/8	1 1/4	1/8	1/2	1 11/16	2.20
P44-8M-20-SDS	79.00	SDS	44	4.411	4.357	4.73	3.50	2B F	5/16	3/8	1 5/16	1/8	1/2	2	2.55
P48-8M-20-SDS	92.00	SDS	48	4.812	4.758	5.04	3.80	2B F	5/16	3/8	1 5/16l	1/8	1/2	2	3.10
P56-8M-20-SDS	102.00	SDS	56	5.614	5.560	5.91	4.60	2W F	5/16	3/8	1 5/16	1/8	1/2	2	4.00
P64-8M-20-SDS	125.00	SDS	64	6.416	6.362	6.61	5.40	2W F	7/32	15/32	1 5/16	1/8	1/2	2	5.20
P72-8M-20-SDS	128.00	SDS	72	7.218	7.164	7.56	6.20	2W F	7/32	15/32	1 5/16	1/8	1/2	2	7.25
P80-8M-20-SDS	138.00	SDS	80	8.020	7.966	8.35	6.90	2W F	7/32	15/32	1 5/16	1/8	1/2	2	8.80
P90-8M-20-SDS	142.00	SDS	90	9.023	8.969	…	7.90	2W	5/16	3/8	1 5/16	1/8	1/2	2	11.15

* These parts are made of steel.

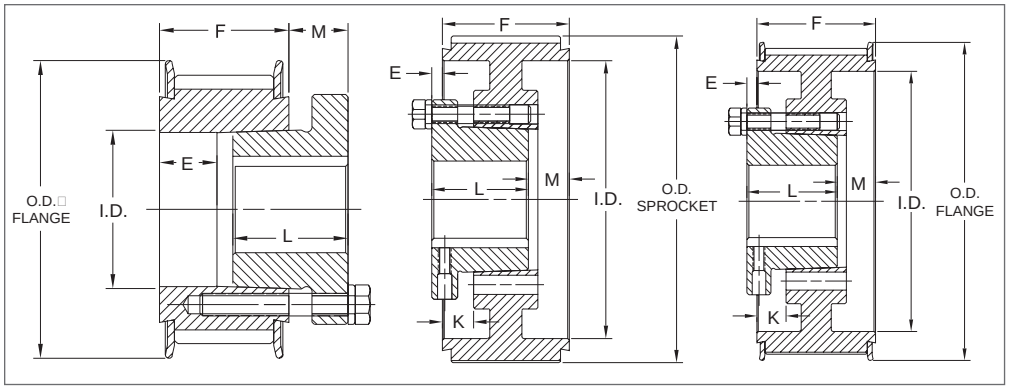

TYPE 1F TYPE 2 TYPE 2F

8 MM PITCH X 30 MM

DIMENSIONS

Part No	List Price $	Bushing	Number of Teeth	Diameters				Type	Dimensions (inches)				Bore Range		Wt
				Pitch Diam.	O.D. Sprocket	O.D. Flange	I.D.		E	K	L	M	Min.	Max.	
For Belts 1 3/16" (30mm) wide - 8mm pitch (8M-30) - Face width (F) = 1 1/2"															
*P24-8M-30-JA	54.00	JA	24	2.406	2.352	2.60	1.34	1B F	33/64	…	1	1 1/64	1/2	1 1/4	1.15
P26-8M-30-JA	56.00	JA	26	2.607	2.553	2.76	1.34	1B F	33/64	…	1	1 1/64	1/2	1 1/4	1.25
*P28-8M-30-L	59.00	L	28	2.807	2.759	3.11	1.60	1B F	17/32	…	1 11/32	11/16	1/2	1 1/2	1.40
P30-8M-30-L	60.00	L	30	3.008	2.958	3.25	1.60	1B F	17/32	…	1 11/32	11/16	1/2	1 1/2	1.70
P32-8M-30-L	62.00	L	32	3.208	3.156	3.43	2.56	3B F	1/16	19/32	1 11/32	3/32	1/2	1 1/2	1.60
P34-8M-30-SH	63.00	SH	34	3.409	3.355	3.58	2.75	3B F	1/8	3/4	1 1/4	1/8	1/2	1 11/16	1.55
P36-8M-30-SH	68.00	SH	36	3.609	3.555	4.02	2.82	3B F	1/8	3/4	1 1/4	1/8	1/2	1 11/16	2.00
P38-8M-30-SH	70.00	SH	38	3.810	3.756	4.17	3.00	3B F	1/8	3/4	1 1/4	1/8	1/2	1 11/16	2.15
P40-8M-30-SH	78.00	SH	40	4.010	3.956	4.41	3.00	3B F	1/8	3/4	1 1/4	1/8	1/2	1 11/16	2.65
P44-8M-30-SDS	86.00	SDS	44	4.411	4.357	4.73	3.50	3B F	1/16	3/4	1 5/16	1/8	1/2	2	2.90
P48-8M-30-SDS	93.00	SDS	48	4.812	4.758	5.04	3.80	3B F	1/16	3/4	1 5/16	1/8	1/2	2	3.55
P56-8M-30-SDS	104.00	SDS	56	5.614	5.560	5.91	4.60	3W F	1/16	3/4	1 5/16	1/8	1/2	2	4.65
P64-8M-30-SK	126.00	SK	64	6.416	6.362	6.61	5.40	2B F	15/32	11/32	1 7/8	3/16	1/2	2 5/8	8.45
P72-8M-30-SK	138.00	SK	72	7.218	7.164	7.56	6.20	2W F	15/32	11/32	1 7/8	3/16	1/2	2 5/8	8.75
P80-8M-30-SK	142.00	SK	80	8.020	7.966	8.35	6.90	2W F	15/32	11/32	1 7/8	3/16	1/2	2 5/8	10.80
P90-8M-30-SK	146.00	SK	90	9.023	8.969	…	7.90	2W	9/16	1/4	1 7/8	3/16	1/2	2 5/8	13.00
P112-8M-30-SK	186.00	SK	112	11.229	11.175	…	10.00	2A	9/16	1/4	1 7/8	3/16	1/2	2 5/8	14.25

* These parts are made of steel.

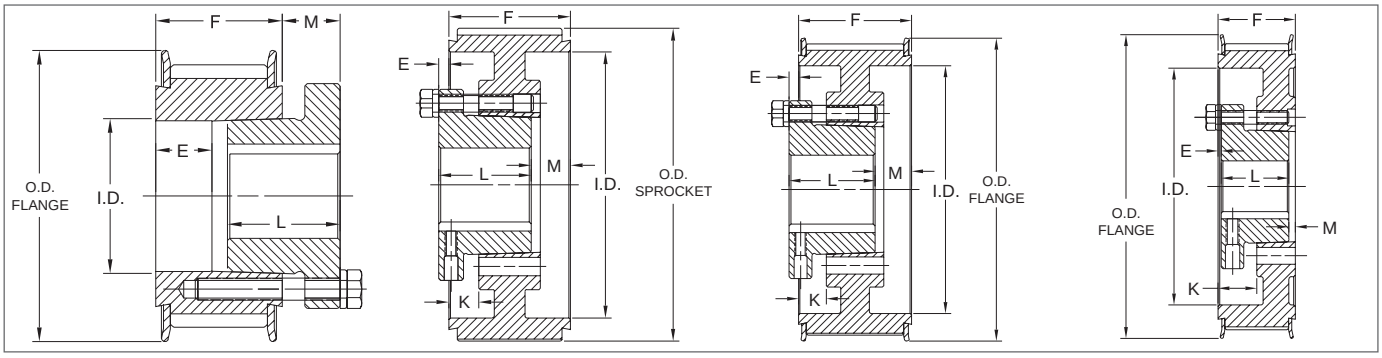

TYPE 1F TYPE 2 TYPE 2F TYPE 3F

8 MM PITCH X 50 MM

DIMENSIONS

Part No	List Price $	Bushing	Number of Teeth	Diameters				Type	Dimensions (inches)				Bore Range		Wt
				Pitch Diam.	O.D. Sprocket	O.D. Flange	I.D.		E	K	L	M	Min.	Max.	
For Belts 2" (50mm) wide - 8mm pitch (8M-50) - Face width (F) = 2 3/8"															
P28-8M-50-JA	80.00	JA	28	2.807	2.759	3.11	2.09	3B F	31/64	1	1	57/64	1/2	1 1/4	1.60
P30-8M-50-JA	82.00	JA	30	3.008	2.958	3.25	2.18	3B F	31/64	1	1	57/64	1/2	1 1/4	1.95
P32-8M-50-L	83.00	L	32	3.208	3.156	3.43	2.56	3B F	11/32	7/8	1 11/32	11/16	1/2	1 1/2	2.05
P34-8M-50-SH	84.00	SH	34	3.409	3.355	3.58	2.75	2B F	1/8	1/2	1 1/4	1 1/4	1/2	1 11/16	2.00
P36-8M-50-SH	85.00	SH	36	3.609	3.555	4.02	2.82	2B F	1/8	1/2	1 1/4	1 1/4	1/2	1 11/16	2.65
P38-8M-50-SH	86.00	SH	38	3.810	3.756	4.17	3.00	2B F	1/8	1/2	1 1/4	1 1/4	1/2	1 11/16	2.85
P40-8M-50-SH	88.00	SH	40	4.010	3.956	4.41	3.00	2B F	1/8	1/2	1 1/4	1 1/4	1/2	1 11/16	3.60
P44-8M-50-SD	94.00	SD	44	4.411	4.357	4.73	3.50	2B F	1/8	9/16	1 13/16	11/16	1/2	2	4.55
P48-8M-50-SD	98.00	SD	48	4.812	4.758	5.04	3.80	2B F	1/8	9/16	1 13/16	11/16	1/2	2	5.80
P56-8M-50-SK	115.00	SK	56	5.614	5.560	5.91	4.60	2B F	1/4	9/16	1 7/8	3/4	1/2	2 5/8	7.30
P64-8M-50-SK	130.00	SK	64	6.416	6.362	6.61	5.40	2W F	13/64	39/64	1 7/8	51/64	1/2	2 5/8	8.60
P72-8M-50-SK	144.00	SK	72	7.218	7.164	7.56	6.20	2W F	13/64	39/64	1 7/8	51/64	1/2	2 5/8	10.70
P80-8M-50-SF	155.00	SF	80	8.020	7.966	8.35	6.90	2W F	13/64	39/64	2	43/64	1/2	2 15/16	14.15
P90-8M-50-SF	186.00	SF	90	9.023	8.969	…	7.90	2W	1/4	9/16	2	5/8	1/2	2 15/16	16.70
P112-8M-50-SF	234.00	SF	112	11.229	11.175	…	10.00	2A	1/4	9/16	2	5/8	1/2	2 15/16	21.65
P144-8M-50-E	373.00	E	144	14.437	14.383	…	13.20	2A	11/16	3/8	2 5/8	7/16	7/8	3 1/2	31.75
P192-8M-50-E	432.00	E	192	19.249	19.195	…	18.00	2A	11/16	3/8	2 5/8	7/16	7/8	3 1/2	50.80

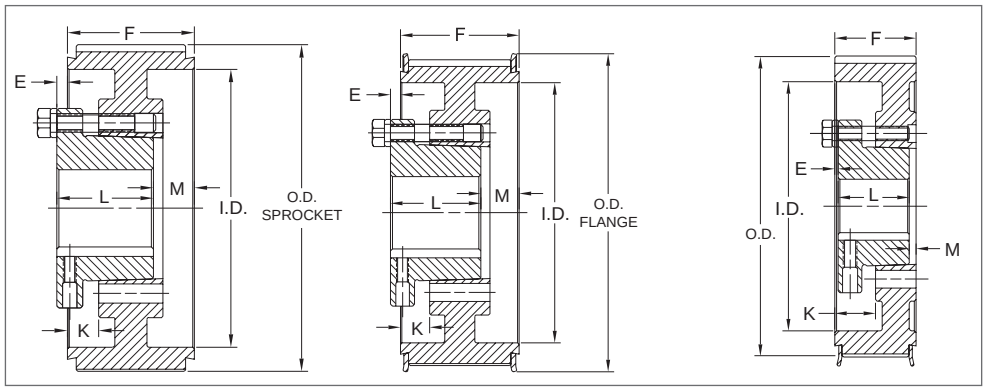

TYPE 2 TYPE 2F TYPE 3F

8 MM PITCH X 85 MM

DIMENSIONS

Part No	List Price $	Bushing	Number of Teeth	Diameters				Type	Dimensions (inches)				Bore Range		Wt
				Pitch Diam.	O.D. Sprocket	O.D. Flange	I.D.		E	K	L	M	Min.	Max.	
For Belts 3 5/16" (85mm) wide - 8mm pitch (8M-85) - Face width (F) = 3 3/4"															
P34-8M-85-SH	95.00	SH	34	3.409	3.355	3.58	2.75	3B F	7/8	1 1/2	1 1/4	1 5/8	1/2	1 11/16	2.85
P36-8M-85-SH	100.00	SH	36	3.609	3.555	4.02	2.82	3B F	7/8	1 1/2	1 1/4	1 5/8	1/2	1 11/16	3.75
P38-8M-85-SH	102.00	SH	38	3.810	3.756	4.17	3.00	3B F	7/8	1 1/2	1 1/4	1 5/8	1/2	1 11/16	4.05
P40-8M-85-SD	106.00	SD	40	4.010	3.956	4.41	3.29	3B F	9/16	1 1/4	1 13/16	1 3/8	1/2	2	4.50
P44-8M-85-SD	110.00	SD	44	4.411	4.357	4.73	3.50	3B F	9/16	1 1/4	1 13/16	1 3/8	1/2	2	6.15
P48-8M-85-SD	120.00	SD	48	4.812	4.758	5.04	3.80	3B F	9/16	1 1/4	1 13/16	1 3/8	1/2	2	7.60
P56-8M-85-SK	140.00	SK	56	5.614	5.560	5.91	4.60	3B F	7/16	1 1/4	1 7/8	1 7/16	1/2	2 5/8	9.65
P64-8M-85-SF	163.00	SF	64	6.416	6.362	6.61	5.40	3B F	31/64	1 19/64	2	1 23/64	1/2	2 5/8	12.20
P72-8M-85-E	177.00	E	72	7.218	7.164	7.56	6.20	3B F	3/64	1 7/64	2 5/8	1 11/64	7/8	3 1/2	16.10
P80-8M-85-E	194.00	E	80	8.020	7.966	8.35	6.90	3B F	3/64	1 7/64	2 5/8	1 11/64	7/8	3 1/2	21.25
P90-8M-85-E	245.00	E	90	9.023	8.969	…	7.90	3W	0	1 1/16	2 5/8	1 1/16	7/8	3 1/2	22.90
P112-8M-85-F	308.00	F	112	11.229	11.175	…	10.00	2W	19/32	5/8	3 5/8	23/32	1	4	40.55
P144-8M-85-F	430.00	F	144	14.437	14.383	…	13.20	2A	19/32	5/8	3 5/8	23/32	1	4	47.30
P192-8M-85-F	485.00	F	192	19.249	19.195	…	18.00	2A	19/32	5/8	3 5/8	23/32	1	4	68.80

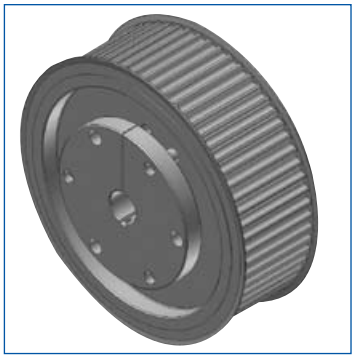

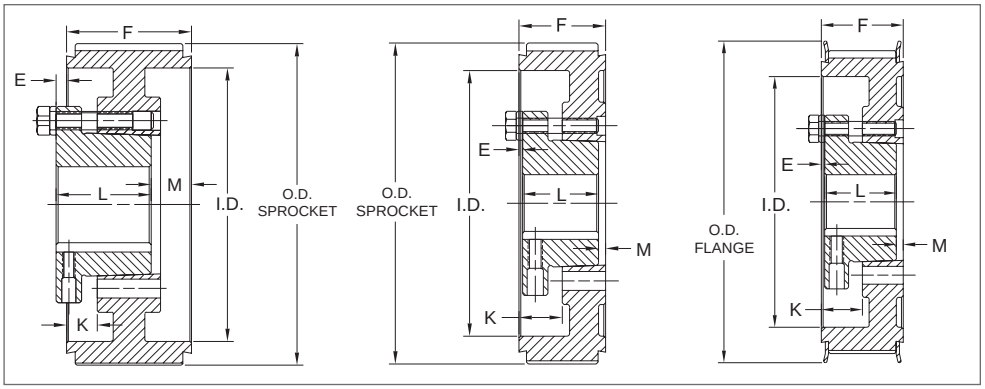

TYPE 2 TYPE 3 TYPE 3F

BALDOR
A MEMBER OF THE ABB GROUP

14 MM PITCH X 40 MM

DIMENSIONS

Part No	List Price $	Bushing	Nb. Teeth	Diameters				Type	Dimensions (inches)				Bore Range		Wt
				Pitch Diam.	O.D. Sprocket	O.D. Flange	I.D.		E	K	L	M	Min.	Max.	
For Belts 2" (40mm) wide - 14mm pitch (14M-40) - Face width (F) = 2 1/8"															
P28-14M-40-SK	85.00	SK	28	4.912	4.802	5.04	3.13	1B F	13/16	0	1 7/8	1 1/16	1/2	2 5/8	5.30
P29-14M-40-SK	90.00	SK	29	5.088	4.978	5.43	3.13	1B F	13/16	0	1 7/8	1 1/16	1/2	2 5/8	6.00
P30-14M-40-SK	93.00	SK	30	5.263	5.153	5.43	4.12	2B F	3/8	7/16	1 7/8	5/8	1/2	2 5/8	5.85
P32-14M-40-SK	102.00	SK	32	5.614	5.504	6.06	4.12	2B F	3/8	7/16	1 7/8	5/8	1/2	2 5/8	7.10
P34-14M-40-SK	105.00	SK	34	5.965	5.855	6.30	4.12	2B F	3/8	7/16	1 7/8	5/8	1/2	2 5/8	8.55
P36-14M-40-SF	115.00	SF	36	6.316	6.206	6.61	4.75	2B F	3/8	7/16	2	1/2	1/2	2 15/16	8.50
P38-14M-40-SF	130.00	SF	38	6.667	6.557	7.21	4.94	2B F	3/8	7/16	2	1/2	1/2	2 15/16	10.20
P40-14M-40-SF	130.00	SF	40	7.018	6.908	7.40	5.06	2B F	3/8	7/16	2	1/2	1/2	2 15/16	11.75
P44-14M-40-E	155.00	E	44	7.720	7.610	8.31	6.12	2B F	13/16	1/4	2 5/8	5/16	7/8	3 1/2	14.80
P48-14M-40-E	165.00	E	48	8.421	8.311	8.90	6.50	2B F	13/16	1/4	2 5/8	5/16	7/8	3 1/2	18.65
P52-14M-40-E	172.00	E	52	9.123	9.013	9.37	7.18	2B F	13/16	1/4	2 5/8	5/16	7/8	3 1/2	22.70
P56-14M-40-E	175.00	E	56	9.825	9.715	10.08	7.88	2B F	13/16	1/4	2 5/8	5/16	7/8	3 1/2	27.25
P60-14M-40-E	227.00	E	60	10.527	10.417	10.79	8.50	2B F	13/16	1/4	2 5/8	5/16	7/8	3 1/2	32.10
P64-14M-40-E	260.00	E	64	11.229	11.119	11.65	9.25	2W F	13/16	1/4	2 5/8	5/16	7/8	3 1/2	29.20
P68-14M-40-E	265.00	E	68	11.930	11.820	12.21	10.00	2W F	13/16	1/4	2 5/8	5/16	7/8	3 1/2	31.55
P72-14M-40-E	272.00	E	72	12.632	12.522	12.91	10.69	2W F	13/16	1/4	2 5/8	5/16	7/8	3 1/2	35.25
P80-14M-40-E	280.00	E	80	14.036	13.926	14.29	12.13	2W F	13/16	1/4	2 5/8	5/16	7/8	3 1/2	14.40
P90-14M-40-E	288.00	E	90	15.790	15.680	…	14.00	2A	13/16	1/4	2 5/8	5/16	7/8	3 1/2	40.70
P112-14M-40-E	365.00	E	112	19.650	19.540	…	17.80	2A	13/16	1/4	2 5/8	5/16	7/8	3 1/2	56.40
P144-14M-40-E	480.00	E	144	25.264	25.154	…	23.38	2A	13/16	1/4	2 5/8	5/16	7/8	3 1/2	78.60

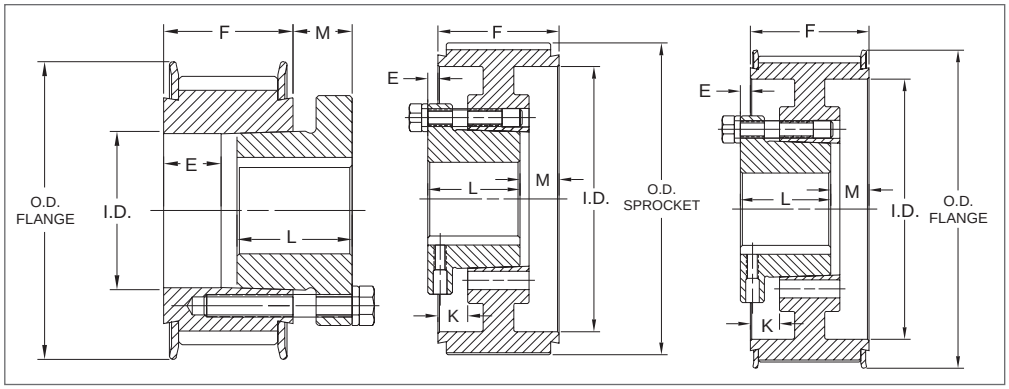

TYPE 1F TYPE 2 TYPE 2F

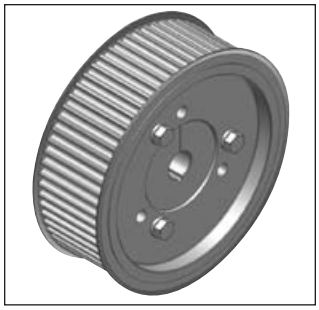

SYNCHRONOUS DRIVES

14 MM PITCH X 55 MM

DIMENSIONS

Part No	List Price $	Bushing	Nb. Teeth	Diameters				Type	Dimensions (inches)				Bore Range		Wt
				Pitch Diam.	O.D. Sprocket	O.D. Flange	I.D.		E	K	L	M	Min.	Max.	
For Belts 2 3/16" (55mm) wide - 14mm pitch (14M-55) - Face width (F) = 2 3/4"															
P28-14M-55-SK	100.00	SK	28	4.912	4.802	5.04	3.13	1B F	13/16	0	1 7/8	1 11/16	1/2	2 5/8	6.85
P29-14M-55-SK	105.00	SK	29	5.088	4.978	5.43	3.13	1B F	13/16	0	1 7/8	1 11/16	1/2	2 5/8	7.55
P30-14M-55-SK	108.00	SK	30	5.263	5.153	5.43	4.12	2B F	1/16	3/4	1 7/8	15/16	1/2	2 5/8	6.15
P32-14M-55-SK	114.00	SK	32	5.614	5.504	6.06	4.12	2B F	1/16	3/4	1 7/8	15/16	1/2	2 5/8	8.65
P34-14M-55-SK	120.00	SK	34	5.965	5.855	6.30	4.12	2B F	1/16	3/4	1 7/8	15/16	1/2	2 5/8	10.50
P36-14M-55-SF	125.00	SF	36	6.316	6.206	6.61	4.75	2B F	1/16	3/4	2	13/16	1/2	2 15/16	10.10
P38-14M-55-SF	140.00	SF	38	6.667	6.557	7.21	4.94	2B F	1/16	3/4	2	13/16	1/2	2 15/16	12.05
P40-14M-55-SF	143.00	SF	40	7.018	6.908	7.40	5.06	2B F	1/16	3/4	2	13/16	1/2	2 15/16	14.30
P44-14M-55-E	165.00	E	44	7.720	7.610	8.31	6.12	2B F	1/2	9/16	2 5/8	5/8	7/8	3 1/2	16.65
P48-14M-55-E	170.00	E	48	8.421	8.311	8.90	6.50	2B F	1/2	9/16	2 5/8	5/8	7/8	3 1/2	21.65
P52-14M-55-E	178.00	E	52	9.123	9.013	9.37	7.18	2B F	1/2	9/16	2 5/8	5/8	7/8	3 1/2	25.80
P56-14M-55-E	180.00	E	56	9.825	9.715	10.08	7.88	2B F	1/2	9/16	2 5/8	5/8	7/8	3 1/2	31.00
P60-14M-55-E	240.00	E	60	10.527	10.417	10.79	8.50	2B F	1/2	9/16	2 5/8	5/8	7/8	3 1/2	36.05
P64-14M-55-F	275.00	F	64	11.229	11.119	11.65	9.25	2B F	1 3/32	1/8	3 5/8	7/32	1	4	10.25
P68-14M-55-F	285.00	F	68	11.930	11.820	12.21	10.00	2W F	1 3/32	1/8	3 5/8	7/32	1	4	44.00
P72-14M-55-F	290.00	F	72	12.632	12.522	12.91	10.69	2W F	1 3/32	1/8	3 5/8	7/32	1	4	46.70
P80-14M-55-F	338.00	F	80	14.036	13.926	14.29	12.13	2W F	1 3/32	1/8	3 5/8	7/32	1	4	54.50
P90-14M-55-F	345.00	F	90	15.790	15.680	…	14.00	2A	1 3/32	1/8	3 5/8	7/32	1	4	53.30
P112-14M-55-F	405.00	F	112	19.650	19.540	…	17.80	2A	1 3/32	1/8	3 5/8	7/32	1	4	70.70
P144-14M-55-F	520.00	F	144	25.264	25.154	…	23.38	2A	1 3/32	1/8	3 5/8	7/32	1	4	95.90
P168-14M-55-F	670.00	F	168	29.475	29.365	…	28.25	2A	1 3/32	1/8	3 5/8	7/32	1	4	107.30
P192-14M-55-F	840.00	F	192	33.686	33.576	…	32.38	2A	1 3/32	1/8	3 5/8	7/32	1	4	136.20
P216-14M-55-F	1356.00	F	216	37.896	37.786	…	36.62	2A	1 3/32	1/8	3 5/8	7/32	1	4	166.20

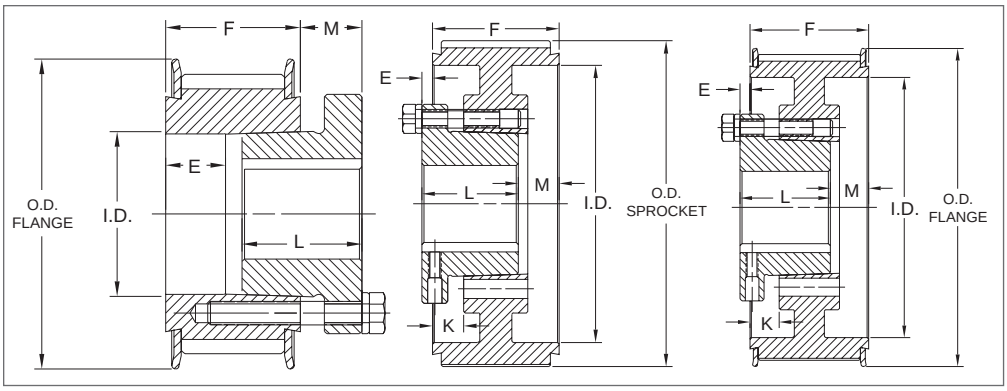

TYPE 1F TYPE 2 TYPE 2F

14 MM PITCH X 85 MM

DIMENSIONS

Part No	List Price $	Bushing	Nb. Teeth	Diameters				Type	Dimensions (inches)				Bore Range		Wt
				Pitch Diam.	O.D. Sprocket	O.D. Flange	I.D.		E	K	L	M	Min.	Max.	
For Belts 3 5/16" (85mm) wide - 14mm pitch (14M-85) - Face width (F) = 4"															
*P28-14M-85-SK	130.00	SK	28	4.912	4.802	5.04	3.96	3B F	3/16	1	1 7/8	1 15/16	1/2	2 5/8	6.60
*P29-14M-85-SK	131.00	SK	29	5.088	4.978	5.43	3.96	3B F	3/16	1	1 7/8	1 15/16	1/2	2 5/8	7.80
P30-14M-85-SK	132.00	SK	30	5.263	5.153	5.43	4.12	3B F	9/16	1 3/8	1 7/8	1 9/16	1/2	2 5/8	7.95
P32-14M-85-SK	138.00	SK	32	5.614	5.504	6.06	4.12	3B F	9/16	1 3/8	1 7/8	1 9/16	1/2	2 5/8	10.75
P34-14M-85-SK	150.00	SK	34	5.965	5.855	6.30	4.12	3B F	9/16	1 3/8	1 7/8	1 9/16	1/2	2 5/8	14.00
P36-14M-85-SF	154.00	SF	36	6.316	6.206	6.61	4.75	3B F	9/16	1 3/8	2	1 7/16	1/2	2 15/16	13.20
P38-14M-85-SF	160.00	SF	38	6.667	6.557	7.21	4.94	3B F	9/16	1 3/8	2	1 7/16	1/2	2 15/16	15.60
P40-14M-85-SF	168.00	SF	40	7.018	6.908	7.40	5.06	3B F	9/16	1 3/8	2	1 7/16	1/2	2 15/16	19.00
P44-14M-85-E	180.00	E	44	7.720	7.610	8.31	6.12	3B F	1/8	1 3/16	2 5/8	1 1/4	7/8	3 1/2	21.10
P48-14M-85-E	188.00	E	48	8.421	8.311	8.90	6.50	3B F	1/8	1 3/16	2 5/8	1 1/4	7/8	3 1/2	27.35
P52-14M-85-E	220.00	E	52	9.123	9.013	9.37	7.18	3B F	1/8	1 3/16	2 5/8	1 1/4	7/8	3 1/2	32.80
P56-14M-85-F	245.00	F	56	9.825	9.715	10.08	7.88	2B F	15/32	3/4	3 5/8	27/32	1	4	43.30
P60-14M-85-F	290.00	F	60	10.527	10.417	10.79	8.50	2B F	15/32	3/4	3 5/8	27/32	1	4	50.70
P64-14M-85-F	300.00	F	64	11.229	11.119	11.65	9.25	2B F	15/32	3/4	3 5/8	27/32	1	4	59.90
P68-14M-85-F	315.00	F	68	11.930	11.820	12.21	10.00	2W F	15/32	3/4	3 5/8	27/32	1	4	51.20
P72-14M-85-F	320.00	F	72	12.632	12.522	12.91	10.69	2W F	15/32	3/4	3 5/8	27/32	1	4	55.70
P80-14M-85-F	380.00	F	80	14.036	13.926	14.29	12.13	2W F	15/32	3/4	3 5/8	27/32	1	4	64.40
P90-14M-85-F	390.00	F	90	15.790	15.680	…	14.00	2A	15/32	3/4	3 5/8	27/32	1	4	69.50
P112-14M-85-F	460.00	F	112	19.650	19.540	…	17.80	2A	15/32	3/4	3 5/8	27/32	1	4	93.70
P144-14M-85-F	590.00	F	144	25.264	25.154	…	23.38	2A	15/32	3/4	3 5/8	27/32	1	4	130.50
P168-14M-85-J	780.00	J	168	29.475	29.365	…	28.12	2A	1	13/32	4 1/2	1/2	1 7/16	4 1/2	153.20
P192-14M-85-J	940.00	J	192	33.686	33.576	…	32.38	2A	1	13/32	4 1/2	1/2	1 7/16	4 1/2	190.20
P216-14M-85-J	1470.00	J	216	37.896	37.786	…	36.38	2A	1	13/32	4 1/2	1/2	1 7/16	4 1/2	242.80

* These parts are made of steel.

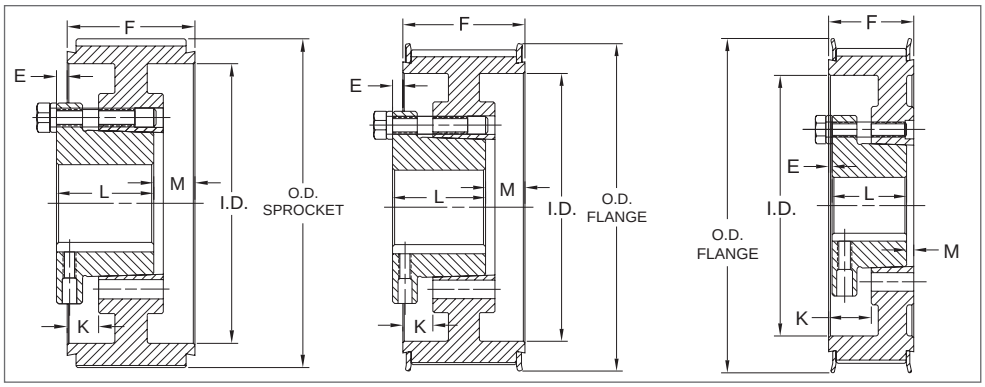

TYPE 2 TYPE 2F TYPE 3F

14 MM PITCH X 115 MM

DIMENSIONS

Part No	List Price $	Bushing	Nb. Teeth	Diameters				Type	Dimensions (inches)				Bore Range		Wt
				Pitch Diam.	O.D. Sprocket	O.D. Flange	I.D.		E	K	L	M	Min.	Max.	
For Belts 4 1/2" (115mm) wide - 14mm pitch (14M-115) - Face width (F) = 5 1/4"															
*P28-14M-115-SK	160.00	SK	28	4.912	4.802	5.04	3.96	3B F	3/16	1	1 7/8	3 3/16	1/2	2 5/8	12.00
*P29-14M-115-SK	165.00	SK	29	5.088	4.978	5.43	3.96	3B F	3/16	1	1 7/8	3 3/16	1/2	2 5/8	13.60
P30-14M-115-SK	169.00	SK	30	5.263	5.153	5.43	4.12	3B F	1 3/16	2	1 7/8	2 3/16	1/2	2 5/8	9.35
P32-14M-115-SK	172.00	SK	32	5.614	5.504	6.06	4.12	3B F	1 3/16	2	1 7/8	2 3/16	1/2	2 5/8	13.25
P34-14M-115-SK	183.00	SK	34	5.965	5.855	6.30	4.12	3B F	1 3/16	2	1 7/8	2 3/16	1/2	2 5/8	17.30
P36-14M-115-SF	190.00	SF	36	6.316	6.206	6.61	4.75	3B F	1 3/16	2	2	2 1/16	1/2	2 15/16	16.55
P38-14M-115-SF	200.00	SF	38	6.667	6.557	7.21	4.94	3B F	1 3/16	2	2	2 1/16	1/2	2 15/16	19.70
P40-14M-115-SF	208.00	SF	40	7.018	6.908	7.40	5.06	3B F	1 3/16	2	2	2 1/16	1/2	2 15/16	23.55
P44-14M-115-E	220.00	E	44	7.720	7.610	8.31	6.12	3B F	3/4	1 13/16	2 5/8	1 7/8	7/8	3 1/2	24.95
P48-14M-115-E	236.00	E	48	8.421	8.311	8.90	6.50	3B F	3/4	1 13/16	2 5/8	1 7/8	7/8	3 1/2	33.25
P52-14M-115-F	275.00	F	52	9.123	9.013	9.37	7.18	3B F	5/32	1 3/8	3 5/8	1 15/32	1	4	42.10
P56-14M-115-F	285.00	F	56	9.825	9.715	10.08	7.88	3B F	5/32	1 3/8	3 5/8	1 15/32	1	4	49.70
P60-14M-115-F	340.00	F	60	10.527	10.417	10.79	8.50	3B F	5/32	1 3/8	3 5/8	1 15/32	1	4	58.50
P64-14M-115-J	365.00	J	64	11.229	11.119	11.65	9.25	2B F	13/32	1	4 1/2	1 5/32	1 7/16	4 1/2	71.20
P68-14M-115-J	382.00	J	68	11.930	11.820	12.21	10.00	2B F	13/32	1	4 1/2	1 5/32	1 7/16	4 1/2	82.10
P72-14M-115-J	390.00	J	72	12.632	12.522	12.91	10.69	2B F	13/32	1	4 1/2	1 5/32	1 7/16	4 1/2	94.00
P80-14M-115-J	450.00	J	80	14.036	13.926	14.29	12.13	2W F	13/32	1	4 1/2	1 5/32	1 7/16	4 1/2	79.80
P90-14M-115-J	500.00	J	90	15.790	15.680	…	14.00	2W	13/32	1	4 1/2	1 5/32	1 7/16	4 1/2	93.60
P112-14M-115-J	620.00	J	112	19.650	19.540	…	17.80	2A	13/32	1	4 1/2	1 5/32	1 7/16	4 1/2	117.20
P144-14M-115-J	780.00	J	144	25.264	25.154	…	23.38	2A	13/32	1	4 1/2	1 5/32	1 7/16	4 1/2	161.70
P168-14M-115-M	970.00	M	168	29.475	29.365	…	28.09	2A	1 19/32	1/16	6 3/4	3/32	2	5 1/2	203.40
P192-14M-115-M	1120.00	M	192	33.686	33.576	…	32.25	2A	1 19/32	1/16	6 3/4	3/32	2	5 1/2	251.10
P216-14M-115-M	1690.00	M	216	37.896	37.786	…	36.38	2A	1 19/32	1/16	6 3/4	3/32	2	5 1/2	306.70

* These parts are made of steel.

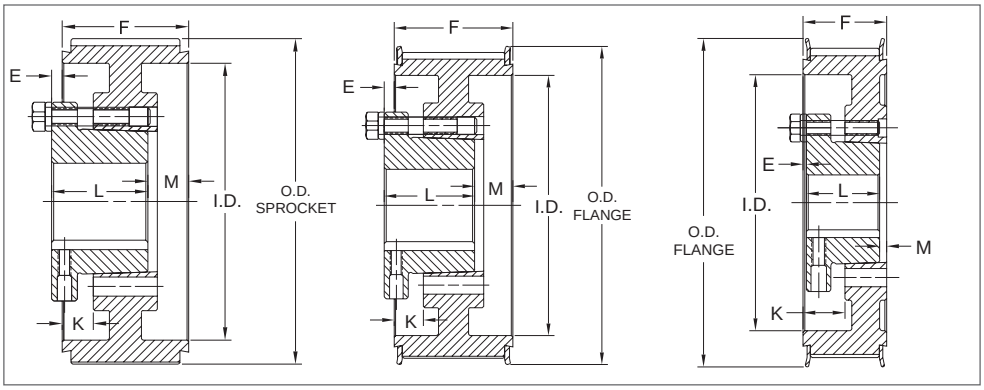

TYPE 2 TYPE 2F TYPE 3F

14 MM PITCH X 170 MM

DIMENSIONS

Part No	List Price $	Bushing	Nb. Teeth	Diameters				Type	Dimensions (inches)				Bore Range		Wt
				Pitch Diam.	O.D. Sprocket	O.D. Flange	I.D.		E	K	L	M	Min.	Max.	
For Belts 6 11/16" (170mm) wide - 14mm pitch (14M-170) - Face width (F) = 7 3/8"															
P36-14M-170-SF	270.00	SF	36	6.316	6.206	6.61	4.75	3B F	2 1/4	3 1/16	2	3 1/8	1/2	2 15/16	21.70
P38-14M-170-SF	280.00	SF	38	6.667	6.557	7.21	4.94	3B F	2 1/4	3 1/16	2	3 1/8	1/2	2 15/16	25.90
P40-14M-170-SF	290.00	SF	40	7.018	6.908	7.40	5.06	3B F	2 1/4	3 1/16	2	3 1/8	1/2	2 15/16	31.20
P44-14M-170-E	300.00	E	44	7.720	7.610	8.31	6.12	3B F	1 13/16	2 7/8	2 5/8	2 15/16	7/8	3 1/2	31.65
P48-14M-170-E	302.00	E	48	8.421	8.311	8.91	6.50	3B F	1 13/16	2 7/8	2 5/8	2 15/16	7/8	3 1/2	42.30
P52-14M-170-F	320.00	F	52	9.123	9.013	9.37	7.18	3B F	1 7/32	2 7/16	3 5/8	2 17/32	1	4	52.40
P56-14M-170-F	330.00	F	56	9.825	9.715	10.08	7.88	3B F	1 7/32	2 7/16	3 5/8	2 17/32	1	4	61.40
P60-14M-170-J	430.00	J	60	10.527	10.417	10.79	8.50	3B F	23/32	2 1/8	4 1/2	2 5/32	1 7/16	4 1/2	74.30
P64-14M-170-J	460.00	J	64	11.229	11.119	11.65	9.25	3B F	23/32	2 1/8	4 1/2	2 5/32	1 7/16	4 1/2	85.10
P68-14M-170-J	490.00	J	68	11.930	11.820	12.21	10.00	3B F	23/32	2 1/8	4 1/2	2 5/32	1 7/16	4 1/2	96.50
P72-14M-170-J	520.00	J	72	12.632	12.522	12.91	10.69	3B F	23/32	2 1/8	4 1/2	2 5/32	1 7/16	4 1/2	109.40
P80-14M-170-J	530.00	J	80	14.036	13.926	14.29	12.13	3W F	23/32	2 1/8	4 1/2	2 5/32	1 7/16	4 1/2	102.00
P90-14M-170-J	610.00	J	90	15.790	15.680	…	14.00	3W	23/32	2 1/8	4 1/2	2 5/32	1 7/16	4 1/2	114.70
P112-14M-170-M	850.00	M	112	19.650	19.540	…	17.80	2A	7/32	1 7/16	6 3/4	27/32	2	5 1/2	170.60
P144-14M-170-M	1050.00	M	144	25.264	25.154	…	23.38	2A	7/32	1 7/16	6 3/4	27/32	2	5 1/2	230.80
P168-14M-170-M	1360.00	M	168	29.475	29.365	…	28.09	2A	7/32	1 7/16	6 3/4	27/32	2	5 1/2	232.80
P192-14M-170-M	1460.00	M	192	33.686	33.576	…	32.25	2A	7/32	1 7/16	6 3/4	27/32	2	5 1/2	285.00
P216-14M-170-M	2080.00	M	216	37.896	37.786	…	36.38	2A	7/32	1 7/16	6 3/4	27/32	2	5 1/2	348.10

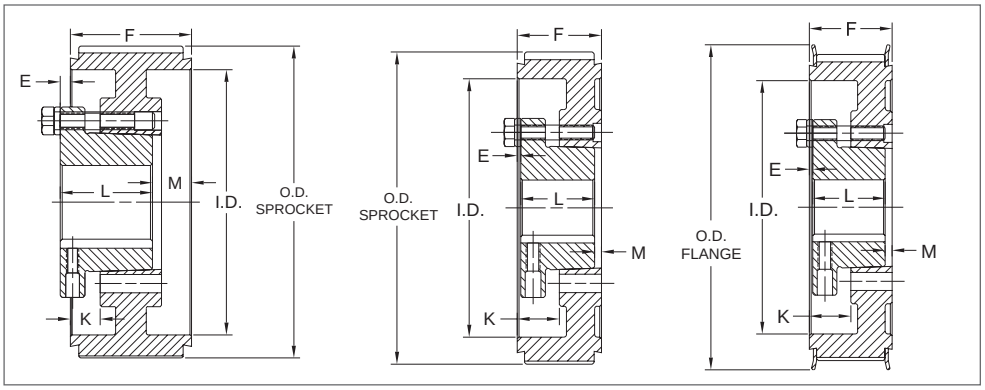

TYPE 2 TYPE 3 TYPE 3F

COUPLINGS

- Torsional softness (absorbs shock and vibration)
- Allows angular misalignment between shafts
- Used for most industrial applications

GENERAL CHARACTERISTICS

	Starflex	4-Flex	Maskaflex
Torque (in.lbs)	3.5 - 6 228	60 - 47 268	900 - 82 500
Max. HP/100 RPM	9.9	18	130.9
Torsional wind-up (deg.)	-	7° - 15°	3° - 7°
Angular misalignment (deg.)	1/2° - 1°	1/4° - 1°	4°
Parallel misalignment (inch.)	0.010 - 0.015	0.010 - 0.040	0.047 - 0.203
Axial permissiveness	-	limited compressibility	0.063" - 0.266"
Sizes available	035 - 225	3 - 13	50 - 200
Elements available	Nitrile Rubber (NBR)	EPDM	Natura; Rubber (NR)
	Urethan		
	Hytrel	Hytrel	
	Bronze		

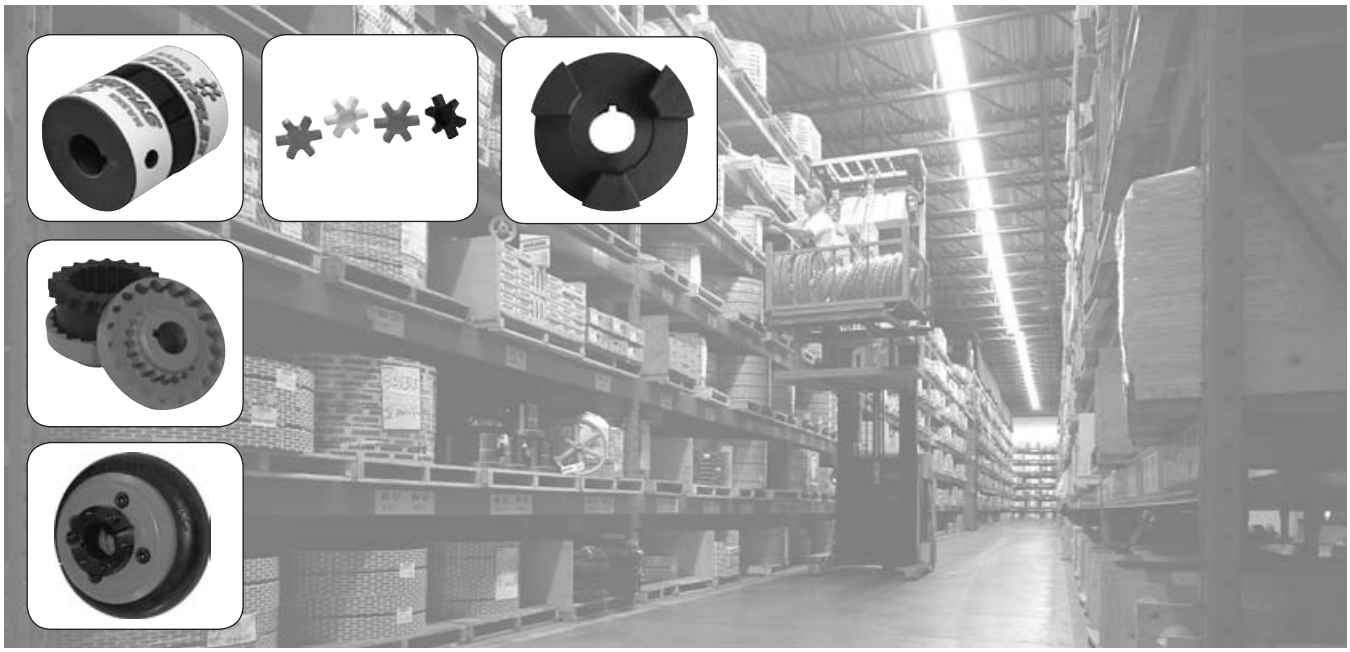

MASKA FLEXIBLE COUPLING SELECTION

FOR ALL MASKA COUPLING TYPES

Selection Process:

We will present two different ways of selecting the proper coupling -- namely, the torque design and the HP design.

1. Determine the appropriate Coupling Series and Element material

Using the General Characteristics chart (pg. 127), determine which coupling series would be more appropriate for your application. From this information, you may have to choose the proper element material according to the related Element Characteristics chart (Starflex pg. 134; 4-Flex pg. 157).

2. Determine the appropriate Service Factor

Using the Application Service Factors chart (pgs 131-132) and the Driver Service Factor Adders chart (pg. 130), determine the Service Factor that corresponds the closest to your application.

3. a) Determine the Torque Design

$$\text{Torque Design} = \frac{(\text{HP x Service Factor x 63025})}{\text{RPM}}$$

3 b) Determine the HP Design per 100 RPM

$$\text{HP per 100 RPM} = \frac{(\text{HP x Service Factor x 100})}{\text{RPM}}$$

4 Select the Coupling Size

Using the Coupling Ratings & Misalignment charts, locate either the Torque or the HP per 100 RPM columns. As the service factor has already been considered, use the chart with a service factor of 1. Skim this column to the first entry where the torque value or the HP per 100 RPM value is greater or equal to the value calculated in step 3. Once this value is located, refer to the corresponding coupling size in the first column of the chart. Refer to the Maximum RPM and Misalignment values to validate that the application requirements are met. If the requirements are not met at this point, another coupling type may be required for the application. Contact our technical support for assistance, if needed.

5. Verify the driver/driven shaft sizes

Using the proper coupling Dimensions chart, verify that your driver and driven shaft dimensions are smaller or equal to the maximum bore size available on the coupling selected. If the coupling bore size is not large enough for the shaft diameter, select the next largest coupling that will fit the driver/driven shaft diameter.

SELECTION EXAMPLE:

A coupling is needed to join a 5 HP electric high torque motor operating at 1750 RPM to an outdoor agricultural belt conveyor. The shaft size of the motor is 1 1/8" and the conveyor is 1 3/16".

1. Determine the appropriate Coupling Series and Element material

According to the General Characteristics chart, the proper series to use would be the MASKA STARFLEX to get the smallest back lash. According to the Element Characteristics chart, Urethane would probably be the best choice for this application.

MASKA FLEXIBLE COUPLING SELECTION

CONTINUED

2. Determine the appropriate Service Factor

To calculate the appropriate service factor to use with your coupling selection, refer to the **Application Service Factor** chart (pgs 131-132) and the **Driver Service Factor Adders** chart (pg.130). To obtain the Service Factor, the Driver Service Factor adder has to be added (1) to the Application Service Factor. To calculate the Service Factor for a MASKA STARFLEX used on a belt conveyor driven by a High Torque AC Motor, the application service factor is 1.20 and the driver service factor adder is 0.25. So, the service factor will be 1.20 + 0.25 = 1.45.

3 a) Determine the Torque Design

$$\text{Torque Design} = \frac{\text{HP x Service Factor x 63025}}{\text{RPM}} =$$

$$\text{Torque Design} = \frac{5 \times 1.45 \times 63025}{1750} = 261.10 \text{ in-lbs}$$

OR

3 b) Determine the HP Design per 100 RPM

$$\text{HP per 100 RPM} = \frac{\text{HP x Service Factor x 100}}{\text{RPM}}$$

$$\text{HP per 100 RPM} = \frac{5 \times 1.45 \times 100}{1750} = 0.414 \text{ HP per 100 RPM}$$

4. Select the Coupling size

Using the **Coupling Ratings & Misalignment** charts for the MASKA STARFLEX Urethane Element, locate either the Torque or the HP per 100 RPM columns with a service factor of 1. Skim down this column to the first item that is greater or equal to the Design Torque: 261.10 in-lbs. or to the HP per 100 RPM: 0.414 HP. For this application, the L095 coupling with a Nominal Torque rating of 291 in-lbs. and a HP per 100 RPM of 0.462 HP is the proper coupling.

According to this chart, the maximum RPM of 1750 on the electric motor does not exceed the 9000 RPM maximum allowed for the L095 sized coupling with a Urethane insert.

5. Verify the driver/driven shaft sizes

The electric motor has a shaft size of 1 1/8" and the conveyor has a shaft size of 1 3/16". Because the maximum bore of the L095 is less than the conveyor shaft size, the L095 coupling is insufficient for this application. Continuing down the maximum bore column in the chart, the L099 size has a maximum bore size of 1 3/16" which is able to accommodate the driver/driven shaft sizes.

Therefore: The required coupling size for this application is a MASKA STARFLEX L099 with a Urethane Element.

SERVICE FACTOR

SERVICE FACTOR CALCULATION: To calculate the appropriate service factor to use in your coupling selection, both the driver and the driven device have to be known. From this information, determine the **Application Service Factor** from the chart on the following pages and the **Driver Service Factor Adder** in the chart below.

To obtain the Service Factor, the Driver Service Factor adder has to be added (€1) to the Application Service Factor.

Ex.: To calculate the Service Factor for a 4FLEX used on a Gyratory Crusher driven by a High Torque AC Motor, the application service factor is 2.00 and the driver service factor adder is 0.50. So, the service factor will be 2.00 + 0.50 = 2.50.

(1) Either add positive values or subtract negative values.

DRIVER SERVICE FACTOR ADDERS

		MASKA STARFLEX	4-FLEX	MASKAFLEX
Electric Motor w / Standard Torque		0	0	0
Electric Motor w / High Torque SF<1.25		0.25	0.25	0
Electric Motor w / High Torque SF > 1.25		0.25	0.5	0
Steam Turbines SF<1.5		0	-0.25	0
Steam Turbines SF >1.5		0	-0.5	0
Reciprocating Engines***	1- cyl	0.7	*	*
	2-3 cyl	0.3	*	*
	4-5-cyl SF < 1.25	0	0.25	0.5
	4-5-cyl SF > 1.25	0	0.5	0.5
	6-11 cyl SF < 1.25	0	0.25	0.5
	6-11 cyl SF > 1.25	0	0.5	0.5
	12 or more cyl SF < 1.25	0	0.25	0
	12 or more cyl SF > 1.25	0	0.5	0

***The service factors shown are for reference only. Reciprocating applications may apply substantial loads on the coupling and/or induce vibration. This could seriously damage the system. Consult Baldor for assistance with these drives.

*Contact Baldor for Technical Assistance

SERVICE FACTOR (continued)

APPLICATION SERVICE FACTORS	MASKA STARFLEX	4-FLEX	MASKAFLEX
Agitators	1.00	1.25	1.00
Blowers			
Centrifugal	1.00	1.25	1.00
Lobe	1.25	1.50	1.50
Vane	1.25	1.25	1.00
Brewing & distilling			
Bottling Machinery, Brew Kettles (distilling)	1.25	1.25	1.00
Cookers	1.25	1.25	1.00
Car Dumpers	2.50	2.00	1.50
Car Pullers	1.50	2.00	1.50
Compressors **			
Centrifugal	1.00	1.25	1.00
Screw	1.25	1.25	1.00
Lobe	1.25	1.25	2.00
Reciprocating			
1 cylinder - single acting	*	*	3.50
1 cylinder - double acting	*	*	3.00
2 cylinder- single acting	*	*	3.00
2 cylinder - double acting	*	*	2.50
3 cl, or more - single acting	*	*	2.50
3 cl, or more - double acting	*	*	2.00
Conveyors			
Assembly, Belt, Oven, Screw	1.2	1.25	1.00
Cranes & Hoist			
Main Hoist-Medium Duty	1.50	1.50	1.50
Main Hoist-Heavy Duty	2.00	2.00	2.00
Crushers			
Cane	3.50	2.00	2.00
Gyratory	3.00	2.00	2.50
Dredges			
Cable reels	2.00	1.50	1.50
Cutter Head Drives	2.50	2.00	2.50
Maneuvering and Utility Winch, Pumps	1.50	1.50	1.50
Dynamometer	1.50	1.25	1.00
Fans			
Centrifugal	1.00	1.25	1.00
Cooling Towers	2.00	2.00	2.00
Forced Draft Propeller	1.50	1.50	1.50
Feeders			
Belt	1.00	1.25	-
Screw	1.00	1.50	-
Reciprocating	2.50	2.00	-
Filter, Press-oil	1.50	1.50	-
Generators			
Not Welding	1.00	1.25	1.00
Hoist	1.50	1.50	1.50
Welding	2.00	2.00	2.00
Kilns	1.50	2.00	2.00
Lumber Machinery			
Band Resaw	1.50	1.50	1.50
Barkers, Edger Feeder, LOG HAUL	2.00	2.00	2.00
Planer, Slab Conveyor	2.00	1.50	1.50
Live Roll - Reciprocating	2.00	-	2.00
Sawdust Conveyor	1.25	1.25	1.00

APPLICATION SERVICE FACTORS	MASKA STARFLEX	4-FLEX	MASKAFLEX
Machine Tools			
Main Drive	1.50	1.50	1.50
Punch Press-gear Driven, Plate Planer	2.00	1.50	1.50
Metal Forming Machines			
Draw Bench, Carriage & Main Drive	2.00	2.00	2.00
Extruder	2.00	2.00	2.00
Wire Drawing	2.00	2.00	2.00
Mills, Rotary Type			
Ball, Pebble	2.00	2.00	2.50
Tube	2.00	2.00	2.50
Rod	2.00	2.00	2.50
Dryers, Coolers	2.00	1.50	1.50
Tumbling, Tumbling Barrel, Rubber Tumbling	1.50	2.00	1.50
Mixers			
Concrete, continuous	1.75	1.50	1.50
Muller	1.50	1.50	1.50
Oil Industry			
Chiller (oil)	1.50	1.50	1.00
Paper Mills			
Agitator (mixers), Reel, Winder	1.20	1.50	1.00
Barking Drum	2.50	2.00	2.50
Beater, Pulper	2.00	1.50	1.50
Jordans	2.00	2.00	2.00
Calenders	1.50	2.00	2.00
Suction Roll (paper)	1.50	1.50	2.00
Winder	1.20	1.50	1.50
Printing Presses	1.50	1.50	1.50
Barge Haul Puller	2.00	2.00	2.50
Pulverisers			
Hammermill-Light Duty	2.00	1.50	1.50
Hammermill-Heavy Duty	2.00	2.00	2.00
Pug Mill	1.75	1.50	1.50
Pumps			
Centrifugal	1.00	1.25	1.00
Gear	1.25	1.50	1.50
Reciprocating:			
1—Cyl, Single Acting	2.00	*	2.50
1—Cyl, Double Acting	2.00	*	2.00
2—Cyl, Single Acting	2.00	*	2.00
2—Cyl, Double Acting	1.75	*	1.50
3 or more Cyl	1.50	*	1.50
Rubber Machinery			
Banbury Mixers	2.50	2.00	2.50
Calender	2.00	2.00	2.00
Screens			
Air washing, Water	1.00	1.25	1.00
Coal and Sand Rotary	1.50	1.50	1.50
Vibrating	2.50	2.00	2.50
Grizzly	2.00	2.00	2.00
Textile Machinery			
Card Machine	1.75	2.00	1.50
Mangel	1.20	1.25	1.00
Loom, Spinner, Tenter frames	1.50	1.50	1.50
Tumbling Barrels	1.75	2.00	2.00
Windlass	2.00	1.50	1.50
Woodworking Machines	1.00	1.25	1.00

*Contact Baldor for technical assistance
** Add 0.5 to factor if without flywheel

MASKA STARFLEX: ELASTOMERIC JAW TYPE COUPLINGS

The most commonly used elastomeric coupling for a wide variety of light to medium-duty applications.

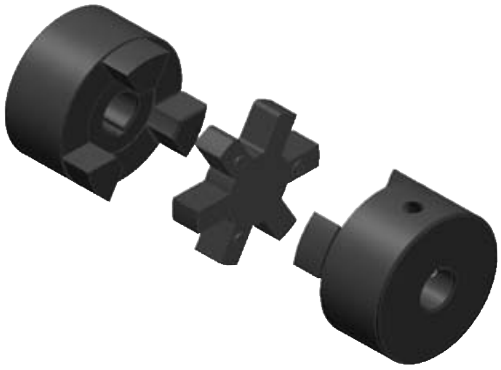

DID YOU KNOW THAT...

- All parts are completely machined in cast iron
- Interchangeable by part number and size with corresponding components
- Cost saving component
- 4 types of insert materials for various applications in varying temperatures and environments

IMPORTANT REMINDER

Careful selection of the type of insert based on the service factor will result in efficient, long-lasting operations

MASKA STARFLEX

Product Features

- High torque capability
- Easy Installation
- Misalignment capability
- No metal-to-metal contact

HOW TO ORDER

STOCK BORE COUPLING
EXAMPLE: **L099X5/8**

L099	X5/8

L099: MASKA STARFLEX HUB SIZE

X5/8: BORE SIZE (5/8")

Metric bore sizes are designated with “MM” after the metric dimension (L099X25MM).

ELEMENT MATERIAL
EXAMPLE: **L099-100H**

L099-100	H

L099-100: MASKA STARFLEX element size (insert)

H : MATERIAL (HYTREL)

To order a complete coupling, (2) hubs with appropriate bore and (1) insert have to be ordered.

IMPORTANT REMINDER

Selecting the proper insert material is just as important as selecting the correct type and size of jaw coupling because of the role they play in the performance and maintenance of the product.

ELEMENT CHARACTERISTICS

Properties	Temperature Range	Misalignment		Shore Hardness	Dampening Capacity	Chemical Resistance	Colour
		Angular Degree	Parallel Inch				
NBR (Rubber) Nitrile Butadiene Rubber is an elastomeric element that is oil resistant with the resilience and elasticity of natural rubber. Most economical and widely-used element.	-40° to +212° F -40° to +100° C	1°	.015	80A	HIGH	GOOD	BLACK
Urethane -- Urethane has 1.5 more torque capability than NBR, provides less dampening effect and has good resistance to oil and chemicals. Not recommended for cyclic or start-stop applications.	-30° to +160° F -34° to +71° C	1°	.015	55D L050-L110 90-95A L150-L225	LOW	VERY GOOD	ORANGE
Hytrel -- Hytrel is a pliant elastomer suited to high torque / temperature operations. Notable resistance to oil and chemincals Not recommended for cyclic or start-stop applications.	-60° to +250° F -51° to 121° C	1/2°	.015	55D	LOW	EXCELLENT	BEIGE
Bronze -- Bronze is a metal insert designed exclusively for slow speed)operations that require high torque. (Maximum 250 RPM) Resistant to extreme environments (temperature, water, oil, dirt).	-40° to +450° F -40° to +232° C	1/2°	.010	--	NIL	EXCELLENT	GOLD

Jaw Couplings Advantages

Jaw design is considered “fail-safe” - if the insert element wears/breaks away, the coupling continues to operate until insert can be conveniently replaced.

Simple design means easy installation, removal and visual inspection. Also offers lighter weight and lower cost vs. torque capacity.

Insert Choice

The choice of the insert element can make a significant difference in the couplings’s performance with regards to vibration, temperature, chemicals, misalignment, high rpm, space limitations and installation/removal.

Maintenance Tips

Through manual inspection, avoid allowing the jaw tips to come into contact; a noisy, grinding operation will result. Do not hesitate to replace the insert if signs of wear are evident.

Do not over-estimate service factors when choosing the coupling / insert. This increases costs unnecessarily and can cause damage elsewhere in the drive. Due to the variety of inserts available, careful selection will result in efficient, long-lasting operations.

GENERAL ORDERING INFORMATION

HUB AND ELEMENTS

Hub No.	List Price ($)		Insert Elements									
			NBR (Rubber)		Urethane		Hytrel		Wt. lbs.	Bronze		
	Inches	Metric	Part No.	List Price	Part No.	List Price	Part No.	List Price		Part No.	List Price	Wt. lbs.
L035* (4)	13.00	-	L035N* (4)	8.40	-	-	-	-	.01	-	-	-
L050* (4)	13.00	15.60	L050N* (4)	8.40	L050U* (4)	34.00	L050H* (4)	28.40	.01	L050B* (4)	47.60	.06
L070	5.05	6.06	L070N	3.00	L070U	5.90	L070H	10.00	.02	L070B	14.50	.07
L075	5.80	6.96	L075N	5.10	L075U	7.30	L075H	15.00	.03	L075B	23.20	.10
L090	8.90	10.68	L090-095N	6.60	L090-095U	10.50	L090-095H	20.00	.04	L090-095B	25.60	.17
L095	13.70	16.44	L090-095N	6.60	L090-095U	10.50	L090-095H	20.00	.04	L090-095B	25.60	.17
L099	17.30	20.76	L099-100N	13.90	L099-100U	27.60	L099-100H	47.60	.07	L099-100B	37.80	.33
L100	25.60	30.72	L099-100N	13.90	L099-100U	27.60	L099-100H	47.60	.07	L099-100B	37.80	.33
L110	35.00	42.00	L110N	16.00	L110U	52.40	L110H	57.60	.14	L110B	45.40	.63
L150	44.80	53.76	L150N	23.00	L150U	63.40	L150H	69.20	.21	L150B	146.00	1.01
L190	70.00	84.00	L190N	28.00	L190U	68.40	L190H	81.60	.27	L190B	222.00	1.35
L225	85.00	102.00	L225N	33.50	L225U	86.60	L225H	95.80	.41	L225B	284.00	2.05

*Important: NOT SOLD INDIVIDUALLY. These parts are packaged 4 to a box.

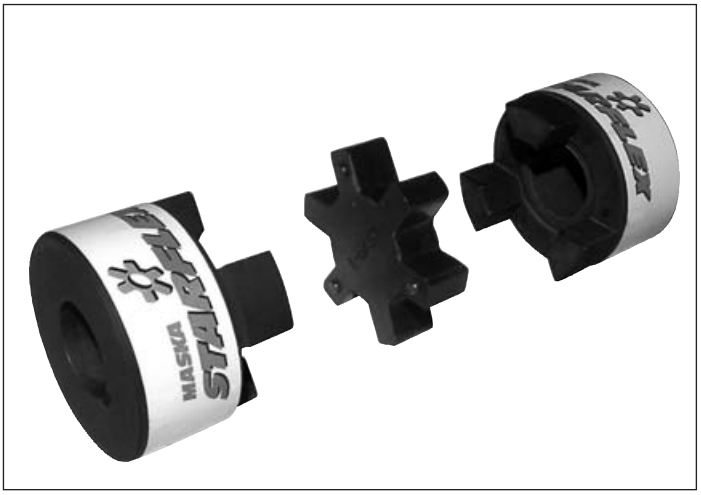

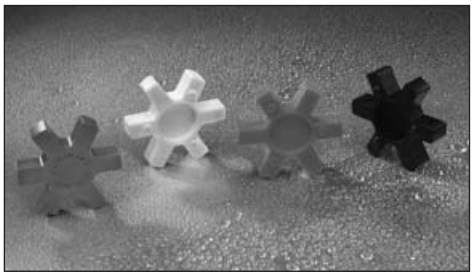

DIMENSIONS

Hub No.	Type	Outside Diameter A	Hub Diameter HD	Overall Length B	Distance between flanges C	Length thru bore D	Bore		Assy Wt. Lbs. (Avg)	Approx. WR^2 lbs-in^2
							Min.	Max.		
L035 *	1	5/8	-	13/16	9/32	17/64	1/8 (4mm)	3/8 (8mm)	0.10	0.003
L050 *	1	1 1/16	-	1 23/32	15/32	5/8	3/16 (5mm)	5/8 (16mm)	0.25	0.054
L070	1	1 3/8	-	2	1/2	3/4	3/16 (7mm)	3/4 (19mm)	0.50	0.115
L075	1	1 3/4	-	2 1/8	1/2	13/16	3/16 (9mm)	7/8 (22mm)	0.90	0.388
L090	1	2 1/8	-	2 9/64	33/64	13/16	3/16 (8mm)	1 (25mm)	1.35	0.772
L095	1	2 1/8	-	2 33/64	33/64	1	7/16 (11mm)	1 1/8 (28mm)	1.55	0.890
L099	1	2 17/32	-	2 27/32	23/32	1 1/16	7/16 (14mm)	1 3/16 (30mm)	2.25	2.048
L100	1	2 17/32	-	3 15/32	23/32	1 3/8	7/16 (12mm)	1 3/8 (35mm)	2.80	2.783
L110	1	3 5/16	-	4 1/4	7/8	1 11/16	5/8 (16mm)	1 5/8 (42mm)	5.95	8.993
L150	1	3 3/4	-	4 1/2	1	1 3/4	5/8 (16mm)	1 7/8 (48mm)	7.90	11.477
L190	2	4 1/2	4	5	1	2	3/4 (19mm)	2 1/8 (55mm)	13.80	39.256
L225	2	5	4 1/4	5 3/8	1	2 3/16	3/4 (30mm)	2 5/8 (65mm)	17.30	65.000

*Important: NOT SOLD INDIVIDUALLY. These parts are packaged 4 to a box.

WRENCH TORQUE TO TIGHTEN SCREWS

Hub No.	Set Screws			Tightening torque in-lbs.
	Qty.	Size		
		Inch Series	Metric Series	
L035	1	#6-32	-	7
L050	2	1/4-20	M4-0.7	45
L070	2	1/4-20	M6-1	78
L075	2	1/4-20	M6-1	78
L090	2	1/4-20	M6-1	78
L095	2	5/16-18	M8-1.25	80
L099	2	5/16-18	M8-1.25	150
L100	2	5/16-18	M8-1.25	150
L110	2	3/8-16	M10-1.5	225
L150	2	3/8-16	M10-1.5	260
L190	2	1/2-13	M12-1.75	540
L225	2	1/2-13	M12-1.75	540

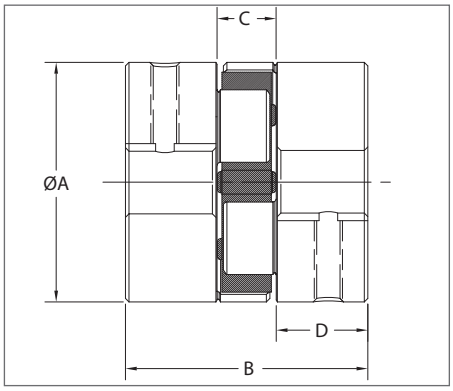

TYPE 1

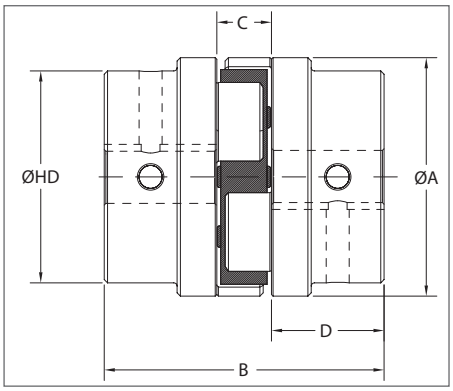

TYPE 2

INCH SERIES: STANDARD BORES AND KEYWAYS

Bore (in)	Keyway (in)	L035	L050	L070	L075	L090	L095	L099	L100	L110	L150	L190	L225
1/8	No KW	X											
3/16	No KW	X	X	X	X	X							
1/4	No KW	X	X	X	X	X							
1/4KW	1/8 x 1/16				POR								
5/16	No KW	X	X	X	X	X							
3/8	No KW	X	X	X	X	X							
3/8KW3/32	3/32 x 3/64		POR	POR	POR	POR							
3/8KW1/8	1/8 x 1/16		POR	POR	POR	POR							
7/16	No KW		X	X	X	X	X	X	X				
7/16KW3/32	3/32 x 3/64		POR	X	POR	POR	X	POR	POR				
7/16KW1/8	1/8 x 1/16			POR	POR	POR	POR	POR	POR				
1/2	No KW		X	X	X	X	X	X	X				
1/2KW	1/8 x 1/16		X	X	X	X	X	X	X				
9/16NOKW	No KW		POR	POR	POR	POR	POR	POR	POR				
9/16	1/8 x 1/16		X	X	X	X	X	X	X				
5/8NOKW	No KW		POR	X	POR	POR	POR	POR	POR	POR	POR		
5/8KW5/32	5/32 x 5/64			X	POR	X	X	X	X	POR	POR		
5/8	3/16 x 3/32		X	X	X	X	X	X	X	X	X		
11/16	3/16 x 3/32			X	X	X	X	X	X	X	X		
3/4NOKW	No KW			POR	POR	POR	POR	POR	POR			POR	POR
3/4KW1/8	1/8 x 1/16			POR	POR	POR	POR	POR	POR	POR	POR	POR	
3/4	3/16 x 3/32			X	X	X	X	X	X	X	X	X	X
13/16	3/16 x 3/32				X	X	X	X	X	X	X	X	X
7/8NOKW	No KW				POR			POR					
7/8	3/16 x 3/32				X	X	X	X	X	X	X	X	X
7/8KW1/4	1/4 x 1/8					POR	X	X	X	POR	X	POR	POR
15/16	1/4 x 1/8					X	X	X	X	X	X	X	X
1	1/4 x 1/8					X	X	X	X	X	X	X	X
1KW	3/16 x 3/32					POR	POR	POR	POR	POR	POR	POR	POR
1 1/16	1/4 x 1/8						X	X	X	X	X	X	X
1 1/8	1/4 x 1/8						X	X	X	X	X	X	X
1 3/16	1/4 x 1/8							X	X	X	X	X	X
1 1/4	1/4 x 1/8								X	X	X	X	X
1 1/4KW	5/16 x 5/32								X	POR	POR	POR	POR
1 5/16	5/16 x 5/32								X	X	X	X	X
1 3/8	5/16 x 5/32								X	X	X	X	X
1 3/8KW	3/8 x 3/16								POR	POR	POR	POR	POR
1 7/16	3/8 x 3/16									X	X	X	X
1 1/2KW	5/16 x 5/32									POR	POR	POR	POR
1 1/2	3/8 x 3/16									X	X	X	X
1 9/16	3/8 x 3/16									X	X	X	X
1 5/8	3/8 x 3/16									X	X	X	X
1 11/16	3/8 x 3/16										X	X	X
1 3/4	3/8 x 3/16										X	X	X
1 3/4KW	7/16 x 7/32										POR	POR	POR
1 13/16	1/2 x 1/4										X	X	X
1 7/8	1/2 x 1/4										X	X	X
1 15/16	1/2 x 1/4											X	X
2	1/2 x 1/4											X	X
2 1/16	1/2 x 1/4											X	X
2 1/8	1/2 x 1/4											X	X
2 3/16	1/2 x 1/4												X
2 1/4	1/2 x 1/4												X
2 3/8	5/8 x 5/16												X
2 5/8	5/8 x 5/16												X

X = Stock POR = Price on Request

METRIC SERIES: STANDARD BORES AND KEYWAYS

Bore (mm)	Keyway (mm)	L035	L050	L070	L075	L090	L095	L099	L100	L110	L150	L190	L225
4	No KW	POR											
5	No KW	POR	POR										
6	No KW	POR	POR										
7	No KW	POR	POR	POR									
8	No KW	POR	POR	POR		X							
9	3 x 1.4		POR	POR	POR								
10	No KW		POR	POR	POR								
10	3 x 1.4		X	POR	POR	POR							
11	4 x 1.8		X	X	POR		POR						
12	No KW		POR	POR		POR							
12	4 x 1.8		X	X	X	POR	POR		POR				
14	No KW		POR	POR		POR	POR						
14	5 x 2.3		POR	X	X	POR	POR	POR	X				
15	No KW		POR		POR		POR	POR	POR				
15	5 x 2.3		POR	X	X	POR	POR	POR	POR				
16	5 x 2.3		POR	X	X	X	POR	POR	X	X	X		
17	5 x 2.3			POR	POR	X	POR		POR	POR	POR		
18	6 x 2.8			POR	POR	POR	POR	POR	X	POR			
19	No KW					POR				POR			
19	6 x 2.8			X	X	X	X	POR	POR	POR	POR	POR	
20	6 x 2.8				X	X	X	POR	POR	POR	POR	POR	
22	6 x 2.8				X	X	X	X	POR	POR	POR		
24	8 x 3.3					X	X	X	X	X	POR	POR	
25	8 x 3.3					X	X	X	X	X	X	POR	
28	No KW										POR	POR	
28	8 x 3.3						X	X	X	X	X	POR	
30	8 x 3.3							POR	X	X	POR	POR	X
32	No KW										POR	POR	POR
32	10 x 3.3								POR	X	X	X	POR
35	No KW										POR	POR	POR
35	10 x 3.3								POR	POR	X	X	X
38	10 x 3.3									X	X	X	POR
40	12 x 3.3									POR	POR	POR	POR
42	12 x 3.3									X	X	X	X
45	14 x 3.8										X	POR	POR
48	No KW										POR		
48	14 x 3.8										X	X	X
50	No KW											POR	POR
50	14 x 3.8											POR	POR
55	No KW											POR	POR
55	16 x 4.3											X	X
60	No KW												POR
60	18 x 4.4												X
65	No KW												
65	18 x 4.4												POR

X = Stock POR = Price on Request

COUPLING RATINGS & MISALIGNMENT

NBR - (NITRILE BUTADIENE RUBBER) ELEMENT MATERIAL

Hub Size	Element Material	Max RPM	HP per 100 RPM Service Factor					Torque (in. lbs.)	Max. parallel misalignment (in.)	Max. angular misalignment (in.)
			1.0	1.5	2.0	2.5	3.0			
L035	NBR	31000	0.006	0.004	0.003	0.002	0.002	3.5	0.015	0.010
L050		18000	0.042	0.028	0.021	0.017	0.014	26.3	0.015	0.018
L070		14000	0.069	0.046	0.035	0.028	0.023	43.2	0.015	0.022
L075		11000	0.143	0.095	0.072	0.057	0.048	90	0.015	0.030
L090		9000	0.228	0.152	0.114	0.091	0.076	144	0.015	0.035
L095		9000	0.308	0.205	0.154	0.123	0.103	194	0.015	0.035
L099		7000	0.505	0.337	0.253	0.202	0.168	318	0.015	0.040
L100		7000	0.662	0.441	0.331	0.265	0.221	417	0.015	0.040
L110		5000	1.257	0.838	0.629	0.503	0.419	792	0.015	0.055
L150		5000	1.967	1.311	0.984	0.787	0.656	1240	0.015	0.065
L190		5000	2.742	1.828	1.371	1.097	0.914	1728	0.015	0.075
L225		4200	3.713	2.475	1.857	1.485	1.238	2340	0.015	0.085

URETHANE - ELEMENT MATERIAL

Hub Size	Element Material	Max RPM	HP per 100 RPM Service Factor					Torque (in. lbs.)	Max. parallel misalignment (in.)	Max. angular misalignment (in.)
			1.0	1.5	2.0	2.5	3.0			
L035	Urethane	31000	-	-	-	-	-	-	-	-
L050		18000	0.062	0.041	0.031	0.025	0.021	39	0.015	0.018
L070		14000	0.103	0.069	0.052	0.041	0.034	65	0.015	0.022
L075		11000	0.214	0.143	0.107	0.086	0.071	135	0.015	0.030
L090		9000	0.343	0.229	0.172	0.137	0.114	216	0.015	0.035
L095		9000	0.462	0.308	0.231	0.185	0.154	291	0.015	0.035
L099		7000	0.757	0.505	0.379	0.303	0.252	477	0.015	0.040
L100		7000	0.993	0.662	0.497	0.397	0.331	626	0.015	0.040
L110		5000	1.885	1.257	0.943	0.754	0.628	1188	0.015	0.055
L150		5000	2.951	1.967	1.476	1.180	0.984	1860	0.015	0.065
L190		5000	4.113	2.742	2.057	1.645	1.371	2592	0.015	0.075
L225		4200	5.569	3.713	2.785	2.228	1.856	3510	0.015	0.085

NOTE: Angular misalignment is the difference between X min and X max. Refer to Figure 2 on the following page.

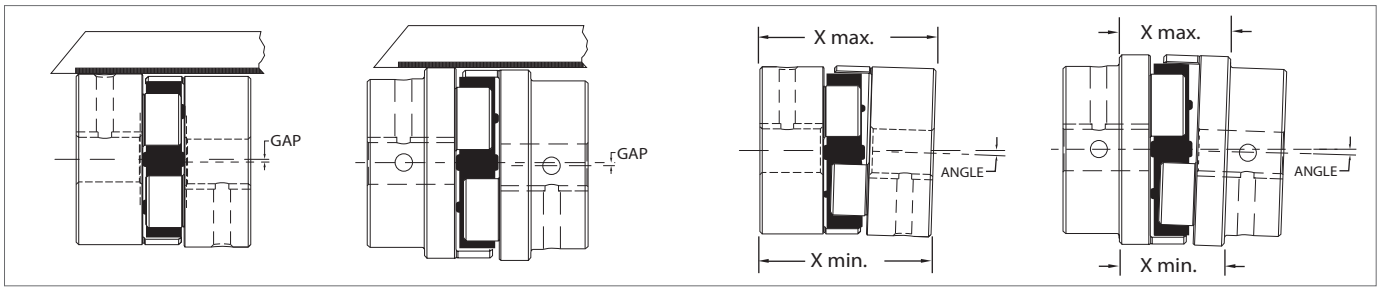

Parallel Misalignment
Figure 1

Angular Misalignment
Figure 2

HYTREL - ELEMENT MATERIAL

Hub Size	Element Material	Max RPM	HP per 100 RPM Service Factor					Torque (in. lbs.)	Max. parallel misalignment (in.)	Max. angular misalignment (in.)
			1.0	1.5	2.0	2.5	3.0			
L035	Hytrel	31000	-	-	-	-	-	-	-	-
L050		18000	0.079	0.053	0.040	0.032	0.026	50	0.015	0.012
L070		14000	0.181	0.121	0.091	0.072	0.060	114	0.015	0.012
L075		11000	0.360	0.240	0.180	0.144	0.120	227	0.015	0.015
L090		9000	0.636	0.424	0.318	0.254	0.212	401	0.015	0.018
L095		9000	0.890	0.593	0.445	0.356	0.297	561	0.015	0.018
L099		7000	1.257	0.838	0.629	0.503	0.419	792	0.015	0.022
L100		7000	1.799	1.199	0.900	0.720	0.600	1134	0.015	0.022
L110		5000	3.599	2.399	1.800	1.440	1.200	2268	0.015	0.030
L150		5000	5.883	3.922	2.942	2.353	1.961	3708	0.015	0.033
L190		5000	7.426	4.951	3.713	2.970	2.475	4680	0.015	0.040
L225		4200	9.882	6.588	4.941	3.953	3.294	6228	0.015	0.044

BRONZE - ELEMENT MATERIAL

Hub Size	Element Material	Max RPM	HP per 100 RPM Service Factor					Torque (in. lbs.)	Max. parallel misalignment (in.)	Max. angular misalignment (in.)
			1.0	1.5	2.0	2.5	3.0			
L035	Bronze	250	-	-	-	-	-	-	-	-
L050		250	0.079	0.053	0.040	0.032	0.026	50	0.01	0.012
L070		250	0.181	0.121	0.091	0.072	0.060	114	0.01	0.012
L075		250	0.360	0.240	0.180	0.144	0.120	227	0.01	0.015
L090		250	0.636	0.424	0.318	0.254	0.212	401	0.01	0.018
L095		250	0.890	0.593	0.445	0.356	0.297	561	0.01	0.018
L099		250	1.257	0.838	0.629	0.503	0.419	792	0.01	0.022
L100		250	1.799	1.199	0.900	0.720	0.600	1134	0.01	0.022
L110		250	3.599	2.399	1.800	1.440	1.200	2268	0.01	0.030
L150		250	5.883	3.922	2.942	2.353	1.961	3708	0.01	0.033
L190		250	7.426	4.951	3.713	2.970	2.475	4680	0.01	0.040
L225		250	9.882	6.588	4.941	3.953	3.294	6228	0.01	0.044

NOTE: Angular misalignment is the difference between X min and X max. Refer to Figure 2 above.

COUPLING SELECTION - SERVICE FACTORS FOR ELEMENT MATERIALS

NBR - (NITRILE BUTADIENE RUBBER) ELEMENT MATERIAL

860 RPM MOTORS						1160 RPM MOTORS					
HP	Service Factors					HP	Service Factors				
	1.0	1.25	1.5	2.0	2.5		1.0	1.25	1.5	2.0	2.5
1/8	L050	L050	L050	L050	L050	1/8	L050	L050	L050	L050	L050
1/4	L050	L050	L070	L070	L075	1/4	L050	L050	L050	L070	L070
1/3	L050	L070	L070	L075	L075	1/3	L050	L050	L070	L070	L075
1/2	L070	L075	L075	L075	L090	1/2	L070	L070	L070	L075	L075
3/4	L075	L075	L075	L090	L090	3/4	L070	L075	L075	L075	L090
1	L075	L090	L090	L095	L095	1	L075	L075	L075	L090	L090
1 1/2	L090	L090	L095	L099	L099	1 1/2	L075	L090	L090	L095	L099
2	L095	L095	L099	L099	L100	2	L090	L090	L095	L099	L099
3	L099	L099	L100	L110	L110	3	L095	L099	L099	L100	L100
5	L100	L110	L110	L110	L150	5	L099	L100	L100	L110	L110
7 1/2	L110	L110	L150	L150	L190	7 1/2	L100	L110	L110	L150	L150
10	L110	L150	L150	L190	L225	10	L110	L110	L150	L150	L190
15	L150	L190	L190	L225	-	15	L150	L150	L150	L190	L225
20	L190	L225	L225	-	-	20	L150	L190	L190	L225	-
25	L225	L225	-	-	-	25	L190	L190	L225	-	-
30	L225	-	-	-	-	30	L190	L225	-	-	-
40	-	-	-	-	-	40	L225	-	-	-	-
50	-	-	-	-	-	50	-	-	-	-	-
60	-	-	-	-	-	60	-	-	-	-	-
75	-	-	-	-	-	75	-	-	-	-	-

MASKA STARFLEX

NBR - ELEMENT MATERIAL

1750 RPM MOTORS						3500 RPM MOTORS					
HP	Service Factors					HP	Service Factors				
	1.0	1.25	1.5	2.0	2.5		1.0	1.25	1.5	2.0	2.5
1/8	L050	L050	L050	L050	L050	1/8	L035	L035	L035	L050	L050
1/4	L050	L050	L050	L050	L050	1/4	L050	L050	L050	L050	L050
1/3	L050	L050	L050	L050	L070	1/3	L050	L050	L050	L050	L050
1/2	L050	L050	L070	L070	L075	1/2	L050	L050	L050	L050	L050
3/4	L070	L070	L070	L075	L075	3/4	L050	L050	L050	L070	L070
1	L070	L075	L075	L075	L075	1	L050	L050	L070	L070	L075
1 1/2	L075	L075	L075	L090	L090	1 1/2	L070	L070	L070	L075	L075
2	L075	L075	L090	L090	L095	2	L070	L075	L075	L075	L075
3	L090	L090	L095	L099	L099	3	L075	L075	L075	L090	L090
5	L095	L099	L099	L100	L110	5	L075	L090	L090	L095	L099
7 1/2	L099	L100	L100	L110	L110	7 1/2	L090	L095	L099	L099	L100
10	L100	L110	L110	L110	L150	10	L095	L099	L099	L100	L110
15	L110	L110	L150	L150	L190	15	L099	L100	L100	L110	L110
20	L110	L150	L150	L190	L225	20	L100	L110	L110	L110	L150
25	L150	L150	L190	L225	L225	25	L110	L110	L110	L150	L150
30	L150	L190	L190	L225	-	30	L110	L110	L150	L150	L190
40	L190	L225	L225	-	-	40	L110	L150	L150	L190	L225
50	L225	L225	-	-	-	50	L150	L150	L190	L225	L225
60	L225	-	-	-	-	60	L150	L190	L190	L225	-
75	-	-	-	-	-	75	L190	L190	L225	-	-

COUPLING SELECTION - SERVICE FACTORS FOR ELEMENT MATERIALS

CONTINUED

URETHANE - ELEMENT MATERIAL

860 RPM MOTORS						1160 RPM MOTORS					
HP	Service Factors					HP	Service Factors				
	1.0	1.25	1.5	2.0	2.5		1.0	1.25	1.5	2.0	2.5
1/8	L050	L050	L050	L050	L050	1/8	L050	L050	L050	L050	L050
1/4	L050	L050	L050	L050	L070	1/4	L050	L050	L050	L050	L050
1/3	L050	L050	L050	L070	L070	1/3	L050	L050	L050	L050	L070
1/2	L050	L070	L070	L075	L075	1/2	L050	L050	L070	L070	L075
3/4	L070	L075	L075	L075	L090	3/4	L070	L070	L070	L075	L075
1	L075	L075	L075	L090	L090	1	L070	L075	L075	L075	L075
1 1/2	L075	L090	L090	L095	L095	1 1/2	L075	L075	L075	L090	L090
2	L090	L090	L095	L095	L099	2	L075	L075	L090	L090	L095
3	L095	L095	L099	L099	L100	3	L090	L090	L095	L099	L099
5	L099	L099	L100	L110	L110	5	L095	L099	L099	L100	L110
7 1/2	L100	L110	L110	L110	L150	7 1/2	L099	L100	L100	L110	L110
10	L110	L110	L110	L150	L150	10	L100	L110	L110	L110	L150
15	L110	L150	L150	L190	L225	15	L110	L110	L150	L150	L190
20	L150	L150	L190	L225	-	20	L110	L150	L150	L190	L225
25	L150	L190	L225	-	-	25	L150	L150	L190	L225	L225
30	L190	L225	L225	-	-	30	L150	L190	L190	L225	-
40	L225	-	-	-	-	40	L190	L225	L225	-	-
50	-	-	-	-	-	50	L225	L225	-	-	-
60	-	-	-	-	-	60	L225	-	-	-	-
75	-	-	-	-	-	75	-	-	-	-	-
100	-	-	-	-	-	100	-	-	-	-	-
125	-	-	-	-	-	125	-	-	-	-	-
150	-	-	-	-	-	150	-	-	-	-	-

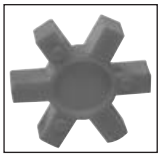

MASKA STARFLEX

URETHANE - ELEMENT MATERIAL

1750 RPM MOTORS						3500 RPM MOTORS					
HP	Service Factors					HP	Service Factors				
	1.0	1.25	1.5	2.0	2.5		1.0	1.25	1.5	2.0	2.5
1/8	L050	L050	L050	L050	L050	1/8	L050	L050	L050	L050	L050
1/4	L050	L050	L050	L050	L050	1/4	L050	L050	L050	L050	L050
1/3	L050	L050	L050	L050	L050	1/3	L050	L050	L050	L050	L050
1/2	L050	L050	L050	L050	L070	1/2	L050	L050	L050	L050	L050
3/4	L050	L050	L070	L070	L075	3/4	L050	L050	L050	L050	L050
1	L050	L070	L070	L075	L075	1	L050	L050	L050	L050	L070
1 1/2	L070	L075	L075	L075	L075	1 1/2	L050	L050	L070	L070	L075
2	L075	L075	L075	L090	L090	2	L050	L070	L070	L075	L075
3	L075	L075	L090	L090	L095	3	L070	L075	L075	L075	L075
5	L090	L095	L095	L099	L099	5	L075	L075	L075	L090	L095
7 1/2	L095	L099	L099	L100	L110	7 1/2	L075	L090	L090	L095	L099
10	L099	L099	L100	L110	L110	10	L090	L095	L095	L099	L099
15	L100	L110	L110	L110	L150	15	L095	L099	L099	L100	L110
20	L110	L110	L110	L150	L150	20	L099	L099	L100	L110	L110
25	L110	L110	L150	L150	L190	25	L099	L100	L110	L110	L110
30	L110	L150	L150	L190	L225	30	L100	L110	L110	L110	L150
40	L150	L150	L190	L225	-	40	L110	L110	L110	L150	L150
50	L150	L190	L225	-		50	L110	L110	L150	L150	L190
60	L190	L225	L225	-	-	60	L110	L150	L150	L190	L225
75	L225	L225	-	-	-	75	L150	L150	L190	L225	L225
100			-	-	-	100	L150	L190	L225	-	-
125			-	-	-	125	L190	L225	L225	-	-
150			-	-	-	150	L225	L225	-	-	-

COUPLING SELECTION - SERVICE FACTORS FOR ELEMENT MATERIALS

CONTINUED

HYTREL - ELEMENT MATERIAL

860 RPM MOTORS						1160 RPM MOTORS					
HP	Service Factors					HP	Service Factors				
	1.0	1.25	1.5	2.0	2.5		1.0	1.25	1.5	2.0	2.5
1/8	L050	L050	L050	L050	L050	1/8	L050	L050	L050	L050	L050
1/4	L050	L050	L050	L050	L050	1/4	L050	L050	L050	L050	L050
1/3	L050	L050	L050	L050	L070	1/3	L050	L050	L050	L050	L050
1/2	L050	L050	L070	L070	L070	1/2	L050	L050	L050	L070	L070
3/4	L070	L070	L070	L070	L075	3/4	L050	L070	L070	L070	L070
1	L070	L070	L070	L075	L075	1	L070	L070	L070	L070	L075
1 1/2	L070	L075	L075	L075	L090	1 1/2	L070	L070	L075	L075	L075
2	L075	L075	L075	L090	L090	2	L070	L075	L075	L075	L090
3	L075	L090	L090	L095	L095	3	L075	L075	L090	L090	L095
5	L090	L095	L095	L099	L100	5	L090	L090	L095	L095	L099
7 1/2	L095	L099	L100	L100	L110	7 1/2	L095	L095	L099	L100	L100
10	L099	L100	L100	L110	L110	10	L095	L099	L100	L100	L110
15	L100	L110	L110	L110	L150	15	L100	L100	L110	L110	L110
20	L110	L110	L110	L150	L150	20	L100	L110	L110	L110	L150
25	L110	L110	L150	L150	L190	25	L110	L110	L110	L150	L150
30	L110	L150	L150	L190	L225	30	L110	L110	L150	L150	L190
40	L150	L150	L190	L225	-	40	L110	L150	L150	L190	L225
50	L150	L190	L225	-	-	50	L150	L150	L190	L225	-
60	L190	L225	-	-	-	60	L150	L190	L225	-	-
75	L225	-	-	-	-	75	L190	L225	L225	-	-
100	-	-	-	-	-	100	L225	-	-	-	-
125	-	-	-	-	-	125	-	-	-	-	-
150	-	-	-	-	-	150	-	-	-	-	-
200	-	-	-	-	-	200	-	-	-	-	-
250	-	-	-	-	-	250	-	-	-	-	-
300	-	-	-	-	-	300	-	-	-	-	-

MASKA STARFLEX

HYTREL - ELEMENT MATERIAL

1750 RPM MOTORS						3500 RPM MOTORS					
HP	Service Factors					HP	Service Factors				
	1.0	1.25	1.5	2.0	2.5		1.0	1.25	1.5	2.0	2.5
1/8	L050	L050	L050	L050	L050	1/8	L050	L050	L050	L050	L050
1/4	L050	L050	L050	L050	L050	1/4	L050	L050	L050	L050	L050
1/3	L050	L050	L050	L050	L050	1/3	L050	L050	L050	L050	L050
1/2	L050	L050	L050	L050	L050	1/2	L050	L050	L050	L050	L050
3/4	L050	L050	L050	L070	L070	3/4	L050	L050	L050	L050	L050
1	L050	L050	L070	L070	L070	1	L050	L050	L050	L050	L050
1 1/2	L070	L070	L070	L070	L075	1 1/2	L050	L050	L050	L070	L070
2	L070	L070	L070	L075	L075	2	L050	L050	L070	L070	L070
3	L070	L075	L075	L075	L090	3	L070	L070	L070	L070	L075
5	L075	L075	L090	L090	L095	5	L070	L070	L075	L075	L075
7 1/2	L090	L090	L095	L095	L099	7 1/2	L075	L075	L075	L090	L090
10	L090	L095	L095	L099	L100	10	L075	L075	L090	L090	L095
15	L095	L099	L100	L100	L110	15	L090	L090	L095	L095	L099
20	L099	L100	L100	L110	L110	20	L090	L095	L095	L099	L100
25	L100	L100	L110	L110	L110	25	L095	L095	L099	L100	L100
30	L100	L110	L110	L110	L150	30	L095	L099	L100	L100	L110
40	L110	L110	L110	L150	L150	40	L099	L100	L100	L110	L110
50	L110	L110	L150	L150	L190	50	L100	L100	L110	L110	L110
60	L110	L150	L150	L190	L225	60	L100	L110	L110	L110	L150
75	L150	L150	L190	L225	-	75	L110	L110	L110	L150	L150
100	L150	L190	L225	-	-	100	L110	L110	L150	L150	L190
125	L190	L225	-	-	-	125	L110	L150	L150	L190	L225
150	L225	-	-	-	-	150	L150	L150	L190	L225	-
200	-	-	-	-	-	200	L150	L190	L225	-	-
250	-	-	-	-	-	250	L190	L225	-	-	-
300	-	-	-	-	-	300	L225	-	-	-	-

4-FLEX:

ELASTOMERIC GEAR TYPE COUPLINGS

DID YOU KNOW THAT...

- Maska 4-Flex part # are based on industry recognized nomenclature
- 4-way flexing action
- All types & sizes in cast iron
- Precise concentrical product to avoid run-out and unbalance
- No lubrication; smooth, quiet power transmission
- Fast & easy installation; no special tools or accessories required

HOW TO ORDER

FLANGE
EXAMPLE: **9SX1-9/16**

9	S	X1-9/16

9: 4FLEX FLANGE SIZE

S: 4FLEX FLANGE TYPE

X1-9/16: BORE SIZE (1-9/16")

EXAMPLE: **8B-SH**

8	B	SH

8: 4FLEX FLANGE SIZE

B: 4FLEX FLANGE TYPE

SH: QD BUSHING SIZE

ELEMENT MATERIAL
EXAMPLE: **9JES**

9	JES

9: 4FLEX ELEMENT SIZE

JES: ELEMENT MATERIAL AND CONSTRUCTION (EPDM SPLIT - "S" STANDS FOR SPLIT)

NEW
"SC" Spacer Hub Type Now Available
See pages 153-156

NOTE: INSTRUCTIONS ON HOW TO INSTALL INCLUDED WITH EACH FLANGE.

General Characteristics:

- Sizes available 3-13
- Torque (in./lbs.) 60 - 47,268
- Torsional wind-up 7° - 15°
- Parallel misalignment (in.) 0.010 - 0.040
- Sleeve Elements: 1-piece, 2-piece & split format
  EPDM & Hytrel. Neoprene sleeves on request.

Technical Features

- ISO tolerance H7 (+.0005 / +.0015)
- Over 1000 HP @ 1750 rpm
- J & S flanges are bored to size
- B flanges are mounted with a QD bushing

TYPES J & S 4-FLEX COUPLING FLANGES

- Available in different bore sizes to fit on standard shafts
- Most flanges have a keyseat and all are supplied with 2 setscrews

TYPE B 4-FLEX COUPLING FLANGES

- Fits with our QD bushing for easy installation & removal
- Secure mounting without setscrews

TYPE "J" COUPLING FLANGE

IMPORTANT REMINDER

NOTE: Not to be used with hytrel sleeves.

DIMENSIONS

Flange Size	List Price $	Dimensions (inches)								*Wt. (lbs.)
		C	D	E	G	H	L	T	X	
3J	7.50	51/64	2.062	13/32	3/8	1 1/2	1 31/32	25/64	5/8	0.3
4J	9.50	55/64	2.460	27/64	5/8	1 5/8	2 11/32	7/16	5/8	0.4
5J	15.00	1 3/64	3.250	29/64	3/4	1 7/8	2 27/32	19/32	59/64	0.9
6J	21.00	1 5/16	4.000	9/16	7/8	2 1/2	3 1/2	3/4	1 3/32	1.2

* Approximate weight for each flange

STOCK BORES

Flange Size	Stock Bore (inches)	Keyseat
3J	3/8 · 1/2 5/8 · 3/4 · (7/8)	none 3/16 x 3/32
4J	1/2 5/8 · 3/4 · 7/8 15/16 · 1	none 3/16 x 3/32 1/4 x 1/8
5J	1/2 5/8 · 3/4 · 7/8 15/16 · 1 · 1 1/8	none 3/16 x 3/32 1/4 x 1/8
6J	5/8 · 3/4 · 7/8 15/16 · 1 · 1 1/8 · 1 3/16 · 1 1/4 1 3/8	3/16 x 3/32 1/4 x 1/8 5/16 x 5/32

( ) = Price and availability on request
All finished bores come with 2 setscrews

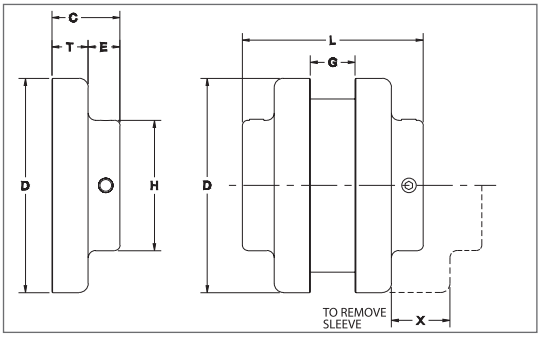

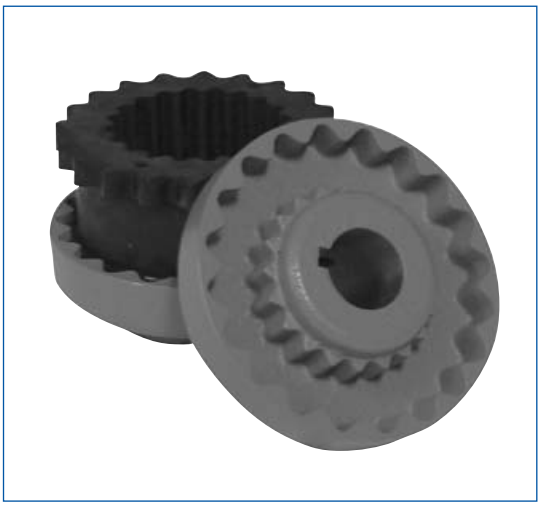

MASKA 4-FLEX

COUPLINGS

BALDOR
A MEMBER OF THE ABB GROUP

TYPE "S" COUPLING FLANGE

Note: Can be used with both sleeve types.

DIMENSIONS

Flange Size	List Price $	Dimensions (inches)								*Wt. (lbs.)
		C	D	E	G	H	L	T	X	
5S	20.00	1 11/32	3.250	29/64	23/32	1 7/8	2 13/16	19/32	31/32	1.1
6S TYPE 1	26.00	1 5/8	4.000	17/32	7/8	2 1/2	3 1/2	25/32	1 3/32	1.9
6S TYPE 2	26.00	1 5/16	4.000	17/32	7/8	2 1/2	3 1/2	25/32	1 3/32	1.8
6S TYPE 3	26.00	1 9/16	4.000	25/32	7/8	2 13/16	4	25/32	1 3/32	1.8
7S	30.00	1 27/32	4.625	11/16	1	2 13/16	3 15/16	25/32	1 5/16	2.6
8S TYPE 1	40.00	2 3/32	5.450	3/4	1 1/8	3 1/4	4 7/16	29/32	1 1/2	4.4
8S TYPE 2	40.00	1 15/16	5.450	1 1/32	1 1/8	3 1/4	5	29/32	1 1/2	3.7
9S TYPE 1	60.00	2 13/32	6.350	25/32	1 7/16	3 7/8	5 1/16	1 1/32	1 3/4	6.8
9S TYPE 2	60.00	2 9/32	6.350	1 1/4	1 7/16	4 1/8	6	1 1/32	1 3/4	6.2
10S TYPE 1	80.00	2 23/32	7.500	13/16	1 5/8	4 3/8	5 11/16	1 7/32	2	10.5
10S TYPE 2	80.00	2 11/16	7.500	1 15/32	1 5/8	4 3/4	7	1 7/32	2	9.8
11S TYPE 1	128.00	3 7/16	8.625	1 1/8	1 7/8	5 1/4	7 1/8	1 1/2	2 3/8	16.6
12S	156.00	4	10.000	1 9/32	2 5/16	5 3/4	8 1/4	1 11/16	2 11/16	26.6
13S	220.00	4 3/8	11.750	1 5/16	2 11/16	6 3/4	9 1/4	1 31/32	3 1/16	45.2

* Approximate weight for each flange
All finished bores come with 2 set screws.

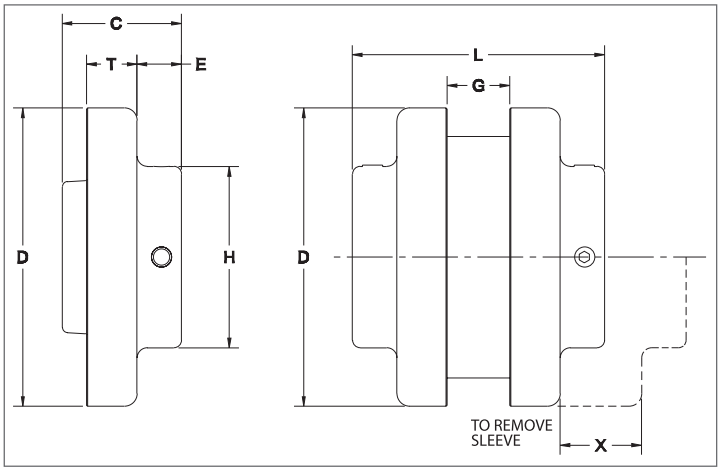

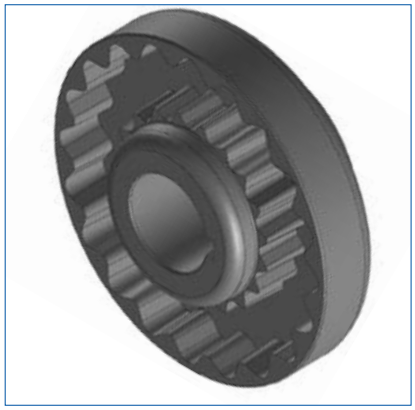

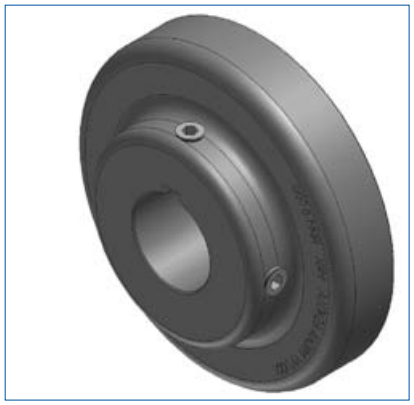

COUPLINGS

TYPE "S" COUPLING FLANGE

The Maska 4-Flex are available from stock in all bores and keyseats listed below. In some cases, as the bore increases in diameter, a shallow keyseat is provided - due to insufficient material thickness. When this happens, Baldor furnishes the correct rectangular key at no charge. This does not affect the coupling's ability to transmit the load. The rectangular key, or flat key as some call it, fits into the standard keyway in the shaft.

STOCK BORES

Flange Size	Stock Bore (inches)	Keyseat
5S	1/2 5/8 · 3/4 · 13/16 · 7/8 15/16 · 1 · 1 1/16 · 1 1/8 1 3/16 1 1/4	**none** 3/16 x 3/32 1/4 x 1/8 1/4 x 1/8 1/4 x 1/16**
6S Type 1	5/8 · 3/4 · 7/8 15/16 · 1 · 1 1/16 · 1 1/8 1 3/16 · 1 1/4 1 5/16 · 1 3/8 1 7/16 1 1/2	3/16 x 3/32 1/4 x 1/8 1/4 x 1/8 5/16 x 5/32 3/8 x 3/16 3/8 x 1/8**
6S Type 2	1 5/8 1 3/4	3/8 x 1/8** 3/8 x 1/16**
6S Type 3	1 7/8	1/2 x 1/16**
7S	5/8 · 3/4 · 7/8 15/16 · 1 · 1 1/16 · 1 1/8 1 3/16 · 1 1/4 1 5/16 · 1 3/8 1 7/16 ·1 1/2 · 1 5/8 1 7/8	3/16 x 3/32 1/4 x 1/8 1/4 x 1/8 5/16 x 5/32 3/8 x 3/16 1/2 x 1/8**
8S Type 1	3/4 · 7/8 15/16 · 1 · 1 1/8 · 1 3/16 1 1/4 1 5/16 · 1 3/8 1 7/16 · 1 1/2 · 1 9/16 · 1 5/8 1 11/16 · 1 3/4 1 7/8 · 1 15/16 2 1/8	3/16 x 3/32 1/4 x 1/8 1/4 x 1/8 5/16 x 5/32 3/8 x 3/16 3/8 x 3/16 1/2 x 1/4 1/2 x 3/16**
8S Type 2	2 3/8	5/8 x 1/8**
9S Type 1	7/8 1 · 1 1/8 · 1 1/4 1 3/8 1 7/16 · 1 1/2 · 1 9/16 · 1 5/8 1 11/16·1 3/4 1 7/8 · 1 15/16 · 2 · 2 1/8 2 3/16 · 2 1/4 2 3/8 · 2 1/2	3/16 x 3/32 1/4 x 1/8 5/16 x 5/32 3/8 x 3/16 3/8 x 3/16 1/2 x 1/4 1/2 x 1/4 5/8 x 5/16

Flange Size	Stock Bore (inches)	Keyseat
9S Type 2	2 7/8	3/4 x 1/8**
10S Type 1	1 1/8 · 1 1/4 1 3/8 1 7/16 · 1 1/2 · 1 9/16 · 1 5/8 1 11/16 · 1 3/4 1 7/8 · 1 15/16 · 2 · 2 1/8 2 3/16 · 2 1/4 2 3/8 · 2 7/16 · 2 1/2 · 2 5/8 2 3/4 2 7/8	1/4 x 1/8 5/16 x 5/32 3/8 x 3/16 3/8 x 3/16 1/2 x 1/4 1/2 x 1/4 5/8 x 5/16 5/8 x 5/16 3/4 x 1/4**
*10S Type 2	3 3/8	7/8 x 3/16**
11S Type 1	1 1/4 1 3/8 1 1/2 · 1 5/8 · 1 3/4 1 7/8 · 2 · 2 1/8 · 2 1/4 2 3/8 · 2 3/4 2 7/8 3 3/8 3 7/16 3 7/8	**none** 5/16 x 5/32 3/8 x 3/16 1/2 x 1/4 5/8 x 5/16 3/4 x 3/8 7/8 x 7/16 7/8 x 3/16** 1 x 1/4**
12S	1 1/2 1 5/8 · 1 3/4 1 7/8 · 2 1/8 2 3/8 · 2 3/4 2 7/8 3 3/8 · 3 7/16 3 7/8	**none** 3/8 x 3/16 1/2 x 1/4 5/8 x 5/16 3/4 x 3/8 7/8 x 7/16 1 x 1/2
13S	2 2 1/8 2 3/8 2 7/8 3 3/8 · 3 7/16 3 15/16	**none** 1/2 x 1/4 5/8 x 5/16 3/4 x 3/8 7/8 x 7/16 1 x 1/2

* = Price and availability on request
** Shallow keyseat
All finished bores come with 2 set screws

METRIC SERIES

Flange Size	Stock Bores (mm)																				
	14	15	16	19	20	24	25	28	30	32	35	38	40	42	45	48	50	55	75	80	85
5S	x					x				x											
6S		x				x				x	x	x									
7S				x		x				x	x			x							
8S						x				x											
9S						x				x			x	x	x	x					
10S						x				x			x	x							
11S						x				x				x			x	x			
12S										x				x							x
13S																			x		

Note: Supplied with metric fasteners.

BALDOR
A MEMBER OF THE ABB GROUP

TYPE "B" COUPLING FLANGE

IMPORTANT REMINDER

NOTE: Not to be used with hytrel sleeves.

DIMENSIONS

Flange Size	List Price $	Bush. Size	Dimensions (inches)									¬Max. Bore (inches)	*Wt. (lbs.)	
			C1	C2	D	E	F	G	L	T	X		Flange	Bush.
6B	38.00	JA	1 17/64	1	4.000	33/64	2	7/8	3 13/32	3/4	1 3/32	1 1/4	1.4	0.4
7B	44.00	JA	1 19/64	1	4.625	33/64	2	1	3 19/32	25/32	1 5/16	1 1/4	1.9	0.4
8B	50.00	SH	1 31/32	1 1/4	5.450	5/8	2 11/16	1 1/8	4 3/16	29/32	1 1/2	1 5/8	2.9	0.9
9B	62.00	SD	2 5/16	1 13/16	6.350	11/16	3 3/16	1 7/16	4 7/8	1 1/32	1 3/4	1 15/16	4.8	1.6
10B	84.00	SK	2 1/32	1 7/8	7.500	13/16	3 7/8	1 5/8	5 11/16	1 7/32	2	2 1/2	7.8	2.7
11B	120.00	SF	2 5/16	2	8.625	13/16	4 5/8	1 7/8	6 1/2	1 1/2	2 3/8	2 15/16	12.0	3.9
12B	146.00	E	2 29/32	2 5/8	10.000	1 1/8	6	2 5/16	7 15/16	1 11/16	2 11/16	3 1/2	18.0	8.5
13B	208.00	F	3 29/32	3 5/8	11.750	1 7/32	6 5/8	2 11/16	9 1/16	1 31/32	3	3 15/16	31.2	13.3

¬ Maximum bore with keyseat

* Approximate weight for each flange

MASKA 4-FLEX

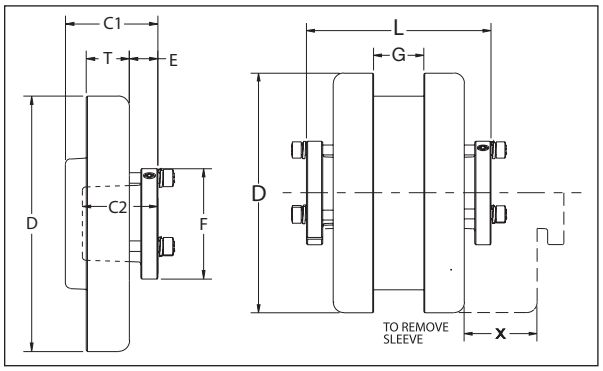

TYPE "SC" SPACER COUPLINGS

DID YOU KNOW THAT...

- Satisfies standard spacing requirements for pump applications
- Accommodates wide range of shaft spacing
- Features AGMA 9 balanced flanges & drop-out center for easy equipment maintenance
- Available with EPDM or Hytrel sleeves. Neoprene sleeves on request.
- Uses H & HS shaft hubs that are bored to size for slip fit or offered with plain bore for reboring
- Shaft attachment with two setscrews; one over the keyway and one at 65° for better shaft grip
- Shaft hub flats are used for holding both shafts stationary while loosening or tightening grade 8 bolts

HOW TO ORDER

FLANGE
EXAMPLE: **9SC50**

9	SC	50

9: 4FLEX FLANGE SIZE
SC: 4FLEX FLANGE TYPE
50: FLANGE # (Determined by the required distance between shafts)

HUB
EXAMPLE: **9SC-HX1-1/8**

9	SC	-HX1-1/16

9: 4FLEX FLANGE SIZE
SC: 4FLEX FLANGE TYPE
-HX1-1/8: BORE SIZE (1 1/8")

ELEMENT MATERIAL
EXAMPLE: **9JES**

9	JES

9: 4FLEX ELEMENT SIZE
JES: ELEMENT MATERIAL AND CONSTRUCTION (EPDM SPLIT - "S" STANDS FOR SPLIT)

EXPLODED VIEW OF MODEL 7SC SPACER COUPLING

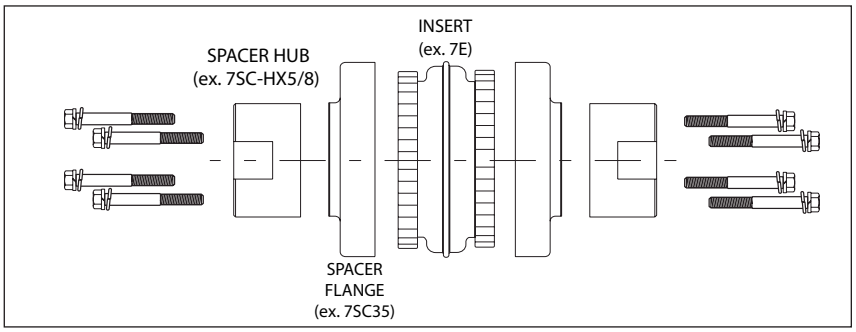

BALDOR
A MEMBER OF THE ABB GROUP

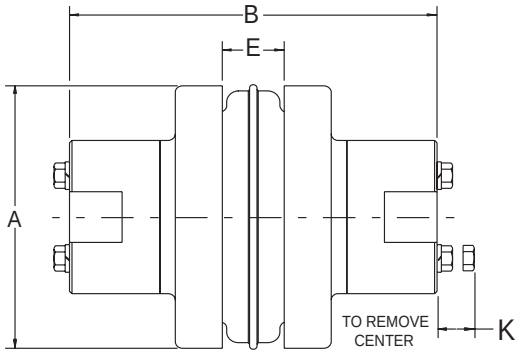

MASKA 4-FLEX

Coupling size	Required Distance Between Shafts*	Use Flange Size	Use Hub No.	Max. Bore Std. Ks	Dimensions				Wt. (lbs.)
					A	B(1)	E	K	
5SC	3 1/2	**5SC35**	5SC-H	1 1/8	3.250	5 5/8	3/4	9/16	4.5
6SC	3 1/2	**6SC35**	6SC-H	1 3/8	4.000	5 7/8	7/8	3/4	7.3
	4 3/8	**6SC44**	6SC-H	1 3/8	4.000	6 3/4	7/8	3/4	8.1
	5	**6SC50**	6SC-H	1 3/8	4.000	7 3/8	7/8	3/4	8.7
7SC	3 1/2	**7SC35**	7SC-H	1 5/8	4.625	6 3/8	1	5/8	9.9
	4 3/8	**7SC44**	7SC-H	1 5/8	4.625	7 1/4	1	5/8	10.8
	5	**7SC50**	7SC-H	1 5/8	4.625	7 7/8	1	5/8	11.4
8SC	3 1/2	**8SC35**	8SC-H	1 7/8	5.450	6 7/8	1 1/8	13/16	15.2
	3 1/2	**8SC35-10**	10SC-H, 10SC-HS	2 3/8	5.450	8 1/8	1 1/8	13/16	23.2
	4 3/8	**8SC44**	8SC-H	1 7/8	5.450	7 3/4	1 1/8	13/16	16.4
	5	**8SC50**	8SC-H	1 7/8	5.450	8 3/8	1 1/8	1 3/16	17.4
	5	**8SC50-10**	10SC-H, 10SC-HS	2 3/8	5.450	9 5/8	1 1/8	1 3/16	27.2
9SC	3 1/2	**9SC35**	9SC-H, 9SC-HS	2 1/8	6.350	7 1/2	1 7/16	1 1/16	18.6
	4 3/8	**9SC44**	9SC-H, 9SC-HS	2 1/8	6.350	8 1/4	1 7/16	1 1/16	22.2
	5	**9SC50**	9SC-H, 9SC-HS	2 1/8	6.350	8 7/8	1 7/16	1 1/16	23.2
	5	**9SC50-11**	11SC-H, 11SC-HS	2 7/8	6.350	10 3/8	1 7/16	1 3/16	40.4
	7	**9SC70-11**	11SC-H, 11SC-HS	2 7/8	6.350	12 3/8	1 7/16	1 3/16	48.2
	7 3/4	**9SC78-11**	11SC-H, 11SC-HS	2 7/8	6.350	13 1/8	1 7/16	1 3/16	51.0
10SC	4 3/4	**10SC48**	10SC-H, 10SC-HS	2 3/8	7.500	9 3/8	1 5/8	1 3/16	37.6
	5	**10SC50**	10SC-H, 10SC-HS	2 3/8	7.500	9 5/8	1 5/8	1 3/16	38.4
	7	**10SC70-13**	13SC-H, 13SC-HS	3 3/8	7.500	13 5/8	1 5/8	1 7/8	72.0
	7 3/4	**10SC78-13**	13SC-H, 13SC-HS	3 3/8	7.500	14 3/8	1 5/8	1 7/8	76.0
	10	**10SC100-13**	13SC-H, 13SC-HS	3 3/8	7.500	16 5/8	1 5/8	1 7/8	88.0
11SC	4 3/4	**11SC48**	11SC-H, 11SC-HS	2 7/8	8.625	10 5/16	1 7/8	1 3/16	54.5
	5	**11SC50**	11SC-H, 11SC-HS	2 7/8	8.625	10 3/8	1 7/8	1 3/16	54.7
	7	**11SC70-14**	14SC-H	3 7/8	8.625	14 5/8	1 7/8	2	86.1
	7 3/4	**11SC78-14**	14SC-H	3 7/8	8.625	15 3/8	1 7/8	2	90.3
	10	**11SC100-14**	14SC-H	3 7/8	8.625	17 5/8	1 7/8	2	102.7
12SC	7	**12SC70**	12SC-H, 12SC-HS	2 7/8	10.000	12 7/8	2 5/16	1 1/2	88.1
	7	**12SC70-14**	14SC-H	3 7/8	10.000	14 5/8	2 5/16	2	99.1
	7 3/4	**12SC78**	12SC-H, 12SC-HS	2 7/8	10.000	13 5/8	2 5/16	1 1/2	91.9
	7 3/4	**12SC78-14**	14SC-H	3 7/8	10.000	15 3/8	2 5/16	2	103.3
	10	**12SC100-14**	14SC-H	3 7/8	10.000	17 5/8	2 5/16	2	115.7
13SC	7 3/4	**13SC78**	13SC-H, 13SC-HS	3 3/8	11.750	14 3/8	2 11/16	1 7/8	129.6
14SC	7 3/4	**14SC78**	14SC-H	3 7/8	13.875	15 3/8	3 1/4	2	179.9

* Check individual coupling size for flange availability
(1) "B" dimension and weight will change if one or two short (HS) hubs are used. Note: Refer to following pages to order - specify components separately

TYPE "SC" COUPLING FLANGE

Flange Size	List Price $	DIMENSIONS					Wt. (lbs.)
		A	C	G	L	T	
5SC35	26.00 $	3.250	2	51/64	1 11/16	19/32	1.20
6SC35	32.00 $	4.000	2 1/2	19/32	1 5/8	23/32	2.09
6SC44	40.00 $	4.000	2 1/2	1 1/32	2 1/16	23/32	2.48
6SC50	48.00 $	4.000	2 1/2	1 11/32	2 3/8	23/32	2.76
7SC35	40.00 $	4.625	2 13/16	15/32	1 5/8	25/32	2.52
7SC44	48.00 $	4.625	2 13/16	29/32	2 1/16	25/32	2.99
7SC50	56.00 $	4.625	2 13/16	1 7/32	2 3/8	25/32	3.33
8SC35	52.00 $	5.450	3 1/4	9/32	1 5/8	29/32	3.67
8SC35-10	64.00 $	5.450	4 3/8	9/32	1 5/8	29/32	3.46
8SC44	64.00 $	5.450	3 1/4	23/32	2 1/16	29/32	4.30
8SC50	76.00 $	5.450	3 1/4	1 1/32	2 3/8	29/32	4.75
8SC50-10	96.00 $	5.450	4 3/8	1 1/32	2 3/8	29/32	5.52
9SC35	64.00 $	6.350	3 5/8	1/16	1 11/16	1 1/32	4.14
9SC44	84.00 $	6.350	3 5/8	7/16	2 1/16	1 1/32	5.89
9SC50	108.00 $	6.350	3 5/8	3/4	2 3/8	1 1/32	6.43
9SC50-11	116.00 $	6.350	5 1/4	3/4	2 3/8	1 1/32	6.95
9SC70-11	120.00 $	6.350	5 1/4	1 3/4	2 3/8	1 1/32	10.80
9SC78-11	124.00 $	6.350	5 1/4	2 1/8	3 3/4	1 1/32	12.37
10SC48	104.00 $	7.500	4 3/8	11/32	2 1/4	1 7/32	9.81
10SC50	112.00 $	7.500	4 3/8	15/32	2 3/8	1 7/32	10.15
10SC70-13	156.00 $	7.500	6 1/8	1 15/32	3 3/8	1 7/32	14.50
10SC78-13	164.00 $	7.500	6 1/8	1 27/32	3 3/4	1 7/32	16.45
10SC100-13	192.00 $	7.500	6 1/8	2 31/32	4 7/8	1 7/32	22.50
11SC48	172.00 $	8.625	5 1/4	1/32	1 1/2	1 1/2	12.53
11SC50	180.00 $	8.625	5 1/4	1/16	1 9/16	1 1/2	12.63
11SC70-14	200.00 $	8.625	6 1/2	1 1/16	2 9/16	1 1/2	16.30
11SC78-14	204.00 $	8.625	6 1/2	1 7/16	2 15/16	1 1/2	18.36
11SC100-14	260.00 $	8.625	6 1/2	2 9/16	4 1/16	1 1/2	24.70
12SC70	192.00 $	10.000	5 3/4	21/32	2 15/32	1 11/16	23.40
12SC70-14	252.00 $	10.000	6 1/2	21/32	2 15/32	1 11/16	21.30
12SC78	196.00 $	10.000	5 3/4	1 1/32	2 27/32	1 11/16	25.39
12SC78-14	264.00 $	10.000	6 1/2	1 1/32	2 27/32	1 11/16	23.40
12SC100-14	288.00 $	10.000	6 1/2	2 5/32	3 31/32	1 11/16	29.70
13SC78	264.00 $	11.750	6 1/8	9/16	3 1/4	1 31/32	38.37
14SC78	396.00 $	13.875	6 1/2	1/32	2 23/32	2 1/4	55.24

SPACER FLANGE

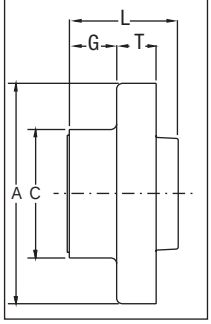

SHAFT HUB

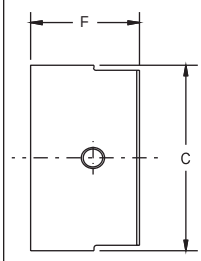

TYPE "SC" COUPLING SPACER SHAFT HUB

Hub No.	STOCK BORES		List Price $	F	C	Cap Screws Furnished	Wt. (lbs.)
	Plain Bore	Bore with Standard keyway & Set Screw					
5SC-H	1/2-PB	1/2 · 5/8 · 3/4 · 7/8 · 1 · 1 1/8	32.00 $	1 3/32	2	4 X 10X1 1/2	0.80
6SC-H	5/8-PB	5/8 · 3/4 · 7/8 · 1 · 1 1/8 · 1 1/4 · 1 3/8	36.00 $	1 7/32	2 1/2	4 X 1/4X1-3/4	1.40
7SC-H	5/8-PB	5/8 · 7/8 · 1 · 1 1/8 · 1 1/4 · 1 3/8 · 1 1/2 · 1 5/8	40.00 $	1 15/32	2 13/16	4 X 1/4X1 7/8	2.00
8SC-H	3/4-PB	3/4 · 7/8 · 1 · 1 1/8 · 1 1/4 · 1 3/8 · 1 1/2 · 1 5/8 · 1 3/4 · 1 7/8	50.00 $	1 23/32	3 1/4	4 X 5/16X2 1/4	3.20
9SC-H	7/8-PB	7/8 · 1 · 1 1/8 · 1 1/4 · 1 3/8 · 1 1/2 · 1 5/8 ·1 3/4 · 1 7/8 · 2 1/8	64.00 $	1 31/32	3 5/8	4 X 3/8X2 3/4	4.20
9SC-HS		1 1/8	60.00 $	1 17/32	3 5/8	4 X 3/8X2 1/4	3.70
10SC-H	1 1/8PB	1 1/8 · 1 5/8 · 1 7/8 · 2 1/8 · 2 3/8	116.00 $	2 11/32	4 3/8	4 X 7/16X3 1/4	7.40
10SC-HS		1 1/8	108.00 $	1 21/32	4 3/8	4 X 7/16X2 1/2	5.50
11SC-H	1 1/8PB	1 1/8 · 1 7/8 · 2 1/8 · 2 3/8 · 2 7/8	160.00 $	2 23/32	5 1/4	4 X 1/2X3 1/2	12.20
11SC-HS		1 1/8 · 1 5/8	152.00 $	1 29/32	5 1/4	4 X 1/2X2 3/4	9.30
12SC-H	1 3/8PB	1 3/8 · 2 · 2 1/8 · 2 3/8 · 2 7/8	208.00 $	2 21/32	5 3/4	4 X 5/8X4	16.60
12SC-HS		2 3/8	196.00 $	2 17/32	5 3/4	4 X 5/8X3 1/2	14.10
13SC-H		1 3/8 · 2 3/8 · 2 7/8 · 3 3/8	232.00 $	3 11/32	6 1/8	4 X 5/8X4 1/2	19.90
13SC-HS		2 1/8 · 2 3/8	220.00 $	2 15/32	6 1/8	4 X 5/8X3 1/2	16.00
14SC-H		1 5/8 · 2 3/8 · 2 7/8 · 3 3/8 · 3 7/8	280.00 $	3 27/32	6 1/2	4 X 5/8X5	24.20

VARYING SPACE BETWEEN SHAFTS POSSIBLE

Spacer couplings to be used for the most popular dimensions between the two shafts are listed below.
Mixing other flanges will produce additional dimensions.

The spacing indicated in the table “Standard” is achieved using identical flanges. The “Combination” table references are with varying type flanges, and the “Semi-Spacer” table designates a spacer coupling flange (with a detachable hub) with a standard flange (without a detachable hub).

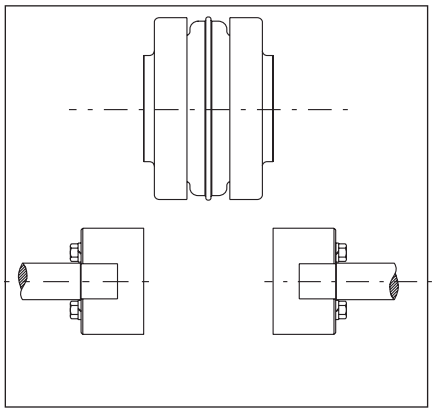

STANDARD

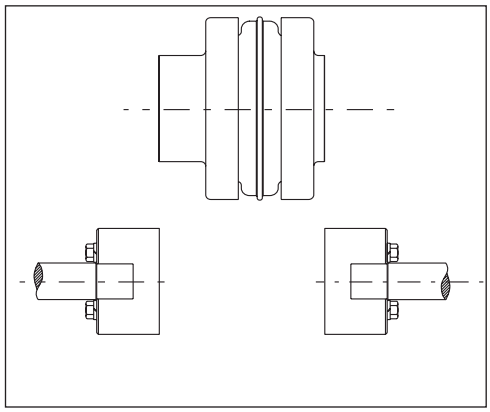

COMBINATION

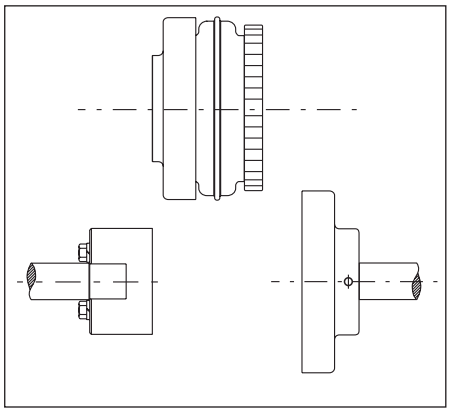

SEMI-SPACER

STANDARD	
Spacing	Use Flanges*
3 1/2	2-( ) SC35
4 3/8	2-( ) SC44
5	2-( ) SC50
7	2-( ) SC70
7 3/4	2-( ) SC78
10	2-( ) SC100

COMBINATION	
Spacing	Use Flanges*
3 15/16	SC35 & SC44
4 1/4	SC35 & SC50
4 11/16	SC44 & SC50
5 1/4	SC35 & SC70
5 5/8	SC35 & SC78
5 11/16	SC44 & SC70
6	SC50 & SC70
6 1/16	SC44 & SC78
6 3/8	SC50 & SC78
6 3/4	SC35 & SC100
7 3/16	SC44 & SC100
7 3/8	SC70 & SC78
7 1/2	SC50 & SC100
8 1/2	SC70 & SC100
8 7/8	SC78 & SC100

SEMI-SPACER	
Spacing	Use Flanges*
1 7/8	S & SC35
2 5/16	S & SC44
2 5/8	S & SC50
3 5/8	S & SC70
4	S & SC78
5 1/8	S & SC100

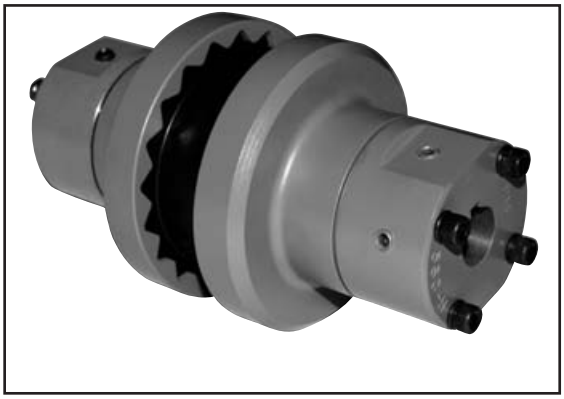

MASKA 4-FLEX

ELEMENT CHARACTERISTICS

SLEEVE TYPES

SHAPES AVAILABLE	EPDM	HYTREL
1 pc, unsplit	JE	H
1 pc, split	JES	-
2 pieces	E	HS
TYPICAL USE	General Purpose	General Purpose
REL. RATING	1X	4X
WIND-UP ANGULAR	15°	7°
MISALIGNMENT	1°	1/4°
TEMPERATURE		
maximum	+275° F.	+250° F.
minimum	—30° F.	—65° F.

Neoprene sleeves on request.

JE

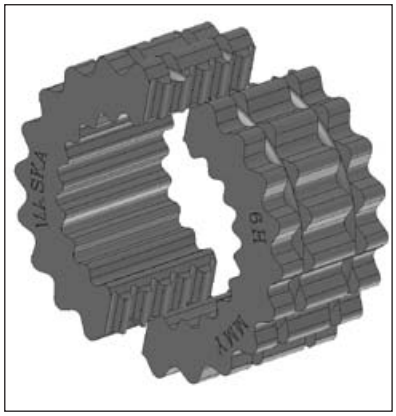

HS

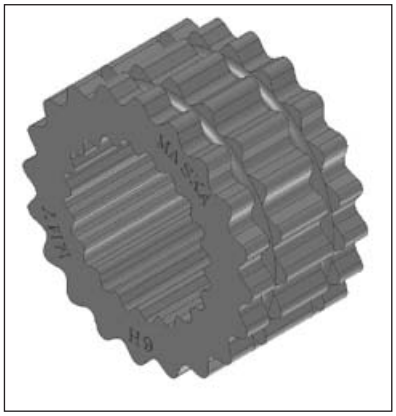

H

JES

E

E (exploded view)

COUPLINGS

EPDM ELEMENT - TYPES "JE", "JES", "E"

DIMENSIONS

Part #	List Price $	Part #	List Price $	Part #	List Price $	Coupling Size	D (inches)	W (inches)	Wt. (lbs)
3JE	4.20	3JES	5.60			3	1 7/8	1	0.06
4JE	6.00	4JES	8.00			4	2 5/16	1 1/4	0.10
5JE	12.00	5JES	14.00	5E	25.00	5	2 15/16	1 9/16	0.20
6JE	20.00	6JES	22.00	6E	30.00	6	3 3/4	1 7/8	0.40
7JE	26.00	7JES	28.00	7E	38.00	7	4 11/32	2 3/16	0.62
8JE	34.00	8JES	38.00	8E	66.00	8	5 1/16	2 1/2	1.13
9JE	40.00	9JES	44.00	9E	74.00	9	6	3	1.46
10JE	56.00	10JES	60.00	10E	90.00	10	7 1/16	3 7/16	2.32
				11E	164.00	11	8 3/16	4	5.10
				12E	240.00	12	9 9/16	4 11/16	8.10
				13E	420.00	13	11 3/16	5 1/2	13.00

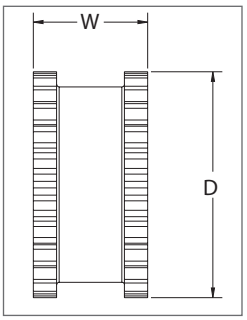

JE & JES

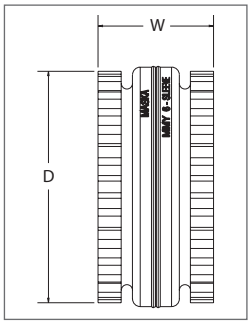

E

COUPLING RATINGS & MISALIGNMENT

Flange Size	EPDM Element	Max. RPM	HP PER 100 RPM Service Factor 1.0	1.5	2.0	2.5	3.0	Torque (in. lbs.)	Stiffness (in. lbs./ rad)	E (inches)	Allow. Misalignment (inches) Parallel	Angular
3	JE, JES	9200	0.1	0.07	0.05	0.04	0.03	60	229	1.188	0.010	0.035
4	JE, JES	7600	0.2	0.13	0.10	0.08	0.07	120	458	1.500	0.010	0.043
5	JE, JES, E	7600	0.4	0.27	0.20	0.16	0.13	240	916	1.938	0.015	0.056
6	JE, JES, E	6000	0.7	0.47	0.35	0.28	0.23	450	1718	2.375	0.015	0.070
7	JE, JES, E	5250	1.2	0.80	0.60	0.48	0.40	725	2769	2.563	0.020	0.081
8	JE, JES, E	4500	1.8	1.20	0.90	0.72	0.60	1135	4335	2.938	0.020	0.094
9	JE, JES, E	3750	2.9	1.93	1.45	1.16	0.97	1800	6875	3.500	0.025	0.109
10	JE, JES, E	3600	4.6	3.07	2.30	1.84	1.53	2875	10980	4.063	0.025	0.128
11	E	3600	7.2	4.80	3.60	2.88	2.40	4530	17300	4.875	0.032	0.151
12	E	2800	11.4	7.60	5.70	4.56	3.80	7200	27500	5.688	0.032	0.175
13	E	2400	18.0	12.00	9.00	7.20	6.00	11350	43350	6.625	0.040	0.195

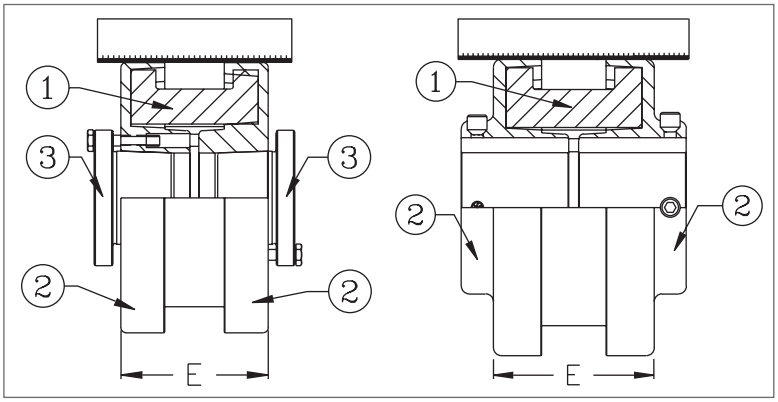

"B" FLANGES "J", "S" FLANGES

1. SLEEVE
2. FLANGE
3. BUSHING

HYTREL ELEMENT - TYPES "H", "HS"

DIMENSIONS

Part #	List Price $	Part #	List Price $	Coupling Size	D (inches)	W (inches)	Wt. (lbs)
6H	80.00	6HS	84.00	6	3 3/4	1 7/8	0.44
7H	116.00	7HS	120.00	7	4 11/32	2 3/16	0.69
8H	126.00	8HS	130.00	8	5 1/16	2 1/2	1.40
9H	166.00	9HS	172.00	9	6	3	1.80
10H	224.00	10HS	230.00	10	7 1/16	3 7/16	2.90
11H	346.00	11HS	354.00	11	8 3/16	4	4.50
12H	496.00	12HS	506.00	12	9 9/16	4 11/16	7.30
-	-	13HS	840.00	13	11 3/16	5 1/2	11.80

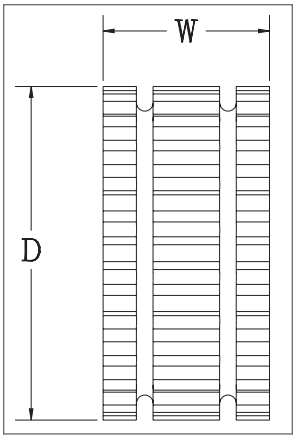

COUPLING RATINGS & MISALIGNMENT

Flange Size	Hytrel Sleeves	Max. RPM	HP PER 100 RPM Service Factor					Torque (in. lbs.)	Stiffness (in. lbs./rad)	E (inches)	Allow. Misalignment (inches)	
			1.0	1.5	2.0	2.5	3.0				Parallel	Angul.
6	H, HS	6000	2.90	1.93	1.45	1.16	0.97	1800	10000	2.375	0.010	0.016
7	H, HS	5250	4.60	3.07	2.30	1.84	1.53	2875	20000	2.563	0.012	0.020
8	H, HS	4500	7.20	4.80	3.60	2.88	2.40	4530	30000	2.938	0.015	0.025
9	H, HS	3750	11.4	7.60	5.70	4.56	3.80	7200	47500	3.500	0.017	0.028
10	H, HS	3600	18.0	12.00	9.00	7.20	6.00	11350	100000	4.063	0.020	0.032
11	H, HS	3600	28.6	19.07	14.30	11.44	9.53	18000	125000	4.875	0.022	0.037
12	H, HS	2800	50.0	33.33	25.00	20.00	16.67	31500	225000	5.688	0.025	0.042
13	HS	2400	75.0	50.00	37.50	30.00	25.00	47268	368900	6.625	0.030	0.050

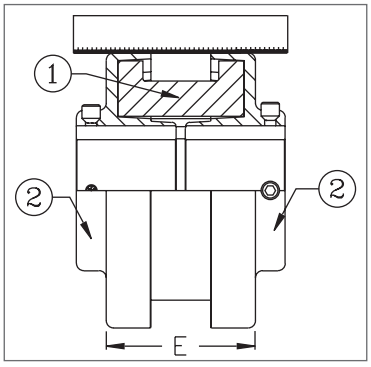

"S" FLANGES

1. SLEEVE
2. FLANGE
3. BUSHING

BALDOR
A MEMBER OF THE ABB GROUP

COUPLING SELECTION - SERVICE FACTORS FOR ELEMENT MATERIALS

EPDM - “JE”, “JES”, “E”

860 RPM MOTORS						1160 RPM MOTORS						1750 RPM MOTORS						3500 RPM MOTORS					
HP	Service Factors					HP	Service Factors					HP	Service Factors					HP	Service Factors				
	1.0	1.25	1.5	2.0	2.5		1.0	1.25	1.5	2.0	2.5		1.0	1.25	1.5	2.0	2.5		1.0	1.25	1.5	2.0	2.5
1/2	3	3	3	4	4	1/2	3	3	3	3	4	1/2	3	3	3	3	3	1/2	-	-	-	-	-
3/4	3	4	4	4	5	3/4	3	3	4	4	4	3/4	3	3	3	3	4	3/4	3	3	3	3	3
1	4	4	4	5	5	1	3	4	4	4	5	1	3	3	3	4	4	1	3	3	3	3	3
1 1/2	4	5	5	5	6	1 1/2	4	4	5	5	5	1 1/2	3	4	4	4	5	1 1/2	3	3	3	3	4
2	5	5	5	6	6	2	4	5	5	5	6	2	4	4	4	5	5	2	3	3	3	4	4
3	5	6	6	6	7	3	5	5	6	6	6	3	4	5	5	5	6	3	3	4	4	4	5
5	6	6	7	7	8	5	6	6	6	7	7	5	5	5	6	6	6	5	4	4	5	5	5
7 1/2	7	7	8	8	9	7 1/2	6	7	7	8	8	7 1/2	6	6	6	7	7	7 1/2	5	5	5	6	6
10	7	8	8	9	9	10	7	7	8	8	9	10	6	6	7	7	8	10	5	5	6	6	6
15	8	9	9	10	10	15	8	8	9	9	10	15	7	7	8	8	9	15	6	6	6	7	7
20	9	9	10	10	11	20	8	9	9	10	10	20	7	8	8	9	9	20	6	6	7	7	8
25	9	10	10	11	11	25	9	9	10	10	11	25	8	8	9	9	10	25	6	7	7	8	8
30	10	10	11	11	12	30	9	10	10	11	11	30	8	9	9	10	10	30	7	7	8	8	9
40	10	11	11	12	12	40	10	10	11	11	12	40	9	9	10	10	11	40	7	8	8	9	9
50	11	11	12	12	13	50	10	11	11	12	12	50	9	10	10	11	11	50	8	8	9	9	10
60	11	12	12	13	13	60	11	11	12	12	13	60	10	10	11	11	12	60	8	9	9	10	10
75	12	12	13	13	-	75	11	12	12	13	13	75	10	11	11	12	12	75	9	9	10	10	11
100	12	13	13	-	-	100	12	12	13	13	-	100	11	11	12	12	13	100	9	10	10	11	11
125	13	13	-	-	-	125	12	13	13	-	-	125	11	12	12	13	13	125	10	10	11	11	-
150	13	-	-	-	-	150	13	13	-	-	-	150	12	12	13	13	-	150	10	11	11	-	-
200	-	-	-	-	-	200	13	-	-	-	-	200	12	13	13	-	-	200	11	11	-	-	-
250	-	-	-	-	-	250	-	-	-	-	-	250	13	13	-	-	-	250	11	-	-	-	-
300	-	-	-	-	-	300	-	-	-	-	-	300	13	-	-	-	-	300	-	-	-	-	-

MASKA 4-FLEX

COUPLING SELECTION - SERVICE FACTORS FOR ELEMENT MATERIALS

HYTREL - “H”, “HS”

860 RPM MOTORS						1160 RPM MOTORS						1750 RPM MOTORS						3500 RPM MOTORS					
HP	Service Factors					HP	Service Factors					HP	Service Factors					HP	Service Factors				
	1.0	1.25	1.5	2.0	2.5		1.0	1.25	1.5	2.0	2.5		1.0	1.25	1.5	2.0	2.5		1.0	1.25	1.5	2.0	2.5
7 1/2	6	6	6	6	6	7 1/2	-	-	-	-	-	7 1/2	-	-	-	-	-	7 1/2	-	-	-	-	-
10	6	6	6	6	6	10	6	6	6	6	6	10	-	-	-	-	-	10	-	-	-	-	-
15	6	6	6	7	7	15	6	6	6	6	7	15	6	6	6	6	6	15	-	-	-	-	-
20	6	6	7	7	8	20	6	6	6	7	7	20	6	6	6	6	6	20	-	-	-	-	-
25	6	7	7	8	8	25	6	6	7	7	8	25	6	6	6	6	7	25	-	-	-	-	-
30	7	7	8	8	9	30	6	7	7	8	8	30	6	6	6	7	7	30	6	6	6	6	6
40	7	8	8	9	9	40	7	7	8	8	9	40	6	6	7	7	8	40	6	6	6	6	6
50	8	8	9	9	10	50	7	8	8	9	9	50	6	7	7	8	8	50	6	6	6	6	7
60	8	9	9	10	10	60	8	8	9	9	10	60	7	7	8	8	9	60	6	6	6	7	7
75	9	9	10	10	11	75	8	9	9	10	10	75	7	8	8	9	9	75	6	6	7	7	8
100	9	10	10	11	11	100	9	9	10	10	11	100	8	8	9	9	10	100	6	7	7	8	8
125	10	10	11	11	12	125	9	10	10	11	11	125	8	9	9	10	10	125	7	7	8	8	9
150	10	11	11	12	12	150	10	10	11	11	12	150	9	9	10	10	11	150	7	8	8	9	9
200	11	11	12	12	13	200	10	11	11	12	12	200	9	10	10	11	11	200	8	8	9	9	10
250	11	12	12	13	13	250	11	11	12	12	13	250	10	10	11	11	12	250	8	9	9	10	10
300	12	12	13	13	-	300	11	12	12	13	13	300	10	11	11	12	12	300	9	9	10	10	11
350	12	12	13	-	-	350	12	12	12	13	-	350	11	11	12	12	12	350	9	10	10	11	11
400	12	13	13	-	-	400	12	12	13	13	-	400	11	11	12	12	13	400	9	10	10	11	11
500	13	13	-	-	-	500	12	13	13	-	-	500	11	12	12	13	13	500	10	10	11	11	-
600	13	-	-	-	-	600	13	13	13	-	-	600	12	12	13	13	-	600	10	11	11	-	-
700	-	-	-	-	-	700	13	13	-	-	-	700	12	12	13	-	-	700	11	11	-	-	-
800	-	-	-	-	-	800	13	-	-	-	-	800	12	13	13	-	-	800	11	11	-	-	-
900	-	-	-	-	-	900	-	-	-	-	-	900	13	13	-	-	-	900	11	-	-	-	-
1000	-	-	-	-	-	1000	-	-	-	-	-	1000	13	13	-	-	-	1000	11	-	-	-	-

MASKA 4-FLEX

MASKAFLEX

ELASTOMERIC TIRE TYPE

Most suitable coupling for applications with shock loads, angular misalignment up to 4° and end float up to 1/4".

Fits with our QD bushing for easier installation and dismounting and has greater versatility than the fixed bore style without damaging the shaft.

DID YOU KNOW THAT...

- Superior European designed and manufactured "X-Tork" tire
- Bonded and thermally stabilized rubber with double-woven textile cords
- Multiple cables in toe that allow the element to seat perfectly and contribute to element stability & flange grip
- Ridged extremity & inner sidewalls designed for enhance grip of the flanges
- Neoprene tire elements available upon request for increased resistance to UV rays and heat

IMPORTANT REMINDER

- Maska Flex couplings are balanced to meet general industrial applications. Applications with a speed superior to 5,000 fts./min. may require more accurate balancing.
- Shaft ends can project beyond the bushing. If this occurs, allow space between shaft ends for endfloat & misalignment.
- The standard tire element in natural rubber is designed for temperatures between -42°C and +82°C.

MASKAFLEX

ELASTOMERIC TIRE TYPE

HOW TO ORDER

COMPLETE COUPLING
EXAMPLE: **MX 120**

MX 120

MX 120: COMPLETE MASKAFLEX PART NUMBER

FLANGE
EXAMPLE: **MXF 120**

MXF 120

MXF 120: MASKAFLEX FLANGE PART NUMBER

ELEMENT MATERIAL
EXAMPLE: **P120**

P120

P120: MASKAFLEX ELEMENT PART NUMBER (TIRE)

A complete Maskaflex coupling corresponds to (2) flanges and (1) element. Specify the bore size required to order the appropriate QD bushing with it.

CROSS REFERENCES

MASKA-FLEX Maska	HI-FLEX Maurey	*PARA-FLEX Dodge	MARTIN-FLEX Martin
MX 50	50JA	PX50	F5 JA
MX 60	60SH	PX60	F6 JA
MX 70	70SH	PX70	F7 SH
MX 80	80SDS	PX80	F8 SDS
MX 90	90SK	PX90	F9 SK
MX 100	100SF	PX100	F10 SF
MX 110	110SF	PX110	F11 SF
MX 120	120E	PX120	F12 E
MX 140	140E	PX140	N/A
MX 160	N/A	PX160	N/A
MX 200	N/A	PX200	N/A

* Paraflex Couplings are designed for use with taper-lock bushings.

WRENCH TORQUE TO TIGHTEN SCREWS

Coupling No.	CAPSCREW	TORQUE
MX 50	1/4-20UNC x 1	96 in-lbs
MX 60	1/4-20UNC x 1-1/4	96 in-lbs
MX 70	5/16-18UNC x 1-1/2	205 in-lbs
MX 80	5/16-18UNC x 1-1/2	205 in-lbs
MX 90	3/8-16 x 1-3/4	360 in-lbs
MX 100	3/8-16 x 1-3/4	360 in-lbs
MX 110	3/8-16 x 2	360 in-lbs
MX 120	1/2-13UNC x 2-1/4	900 in-lbs
MX 140	1/2-13UNC x 2-1/2	900 in-lbs
MX 160	5/8-11UNC x 3 Grade 8	1800 in-lbs
MX 200	5/8-11UNC x 4 Grade 8	1800 in-lbs

Flexible elastomeric element

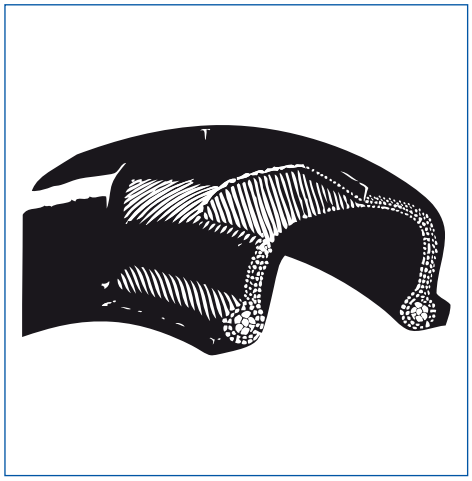

Easy to Assemble

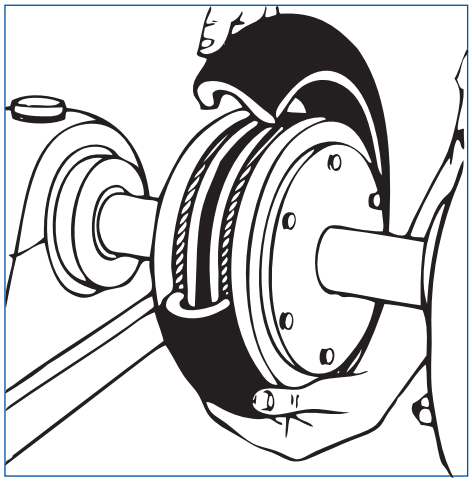

DIMENSIONS

Complete Coupling Part No	List price w/o Bushing Complete Coupling	Bush. Size	¬ Max. Bore	Type	Dimensions (inches) A	B	C	D	E	F	G	Weight (lbs) Com-plete	Flange	Tire
MX 50**	114.00	JA	1 1/4	1	5 1/4	3 7/8	3 23/32	3 17/32	7/8	*	1 17/32	4.7	2.1	.5
MX 60	151.00	SH	1 5/8	1	6 1/2	4 23/32	4 1/2	4 9/32	1 9/32	*	1 25/32	8.0	3.5	1.0
MX 70	201.00	SDS	1 15/16	1	7 3/8	4 17/32	4 5/16	4 1/8	1 1/2	*	1 1/2	10.7	4.7	1.3
MX 80	265.00	SK	2 1/2	1	8 3/8	5 13/16	5 17/32	5 1/4	1 1/2	*	1 1/2	15.5	6.9	1.7
MX 90	335.00	SK	2 1/2	1	9 1/4	5 7/8	5 9/16	5 5/16	1 17/32	*	1 9/16	22.0	10.0	2.0
MX 100	411.00	SF	2 3/4	1	10	6 1/8	5 25/32	5 15/32	1 23/32	*	1 15/32	32.0	15.0	2.0
MX 110	457.00	SF	2 3/4	1	11	5 7/8	5 1/2	5 3/16	1 9/16	*	1 3/16	46.0	21.5	3.0
MX 120	529.00	E	3 7/16	1	12 3/8	7 1/4	6 7/8	6 1/2	1 3/4	*	1 1/4	59.8	28.0	3.8
MX 140	918.00	F	3 15/16	2	14 1/8	9 1/2	9 1/16	8 5/8	2 1/16	*	1 3/8	132.5	64.0	4.5
MX 160	1352.00	J	4	2	16 5/8	11 1/2	10 7/8	10 3/8	2 11/16	*	1 3/8	208.7	100.0	8.7
MX 200	2043.00	J	4	2	20	11 3/4	11 5/16	10 13/16	3 5/16	*	1 13/16	366.0	174.0	18.0

¬ Maximum bore with keyseat
* Shaft ends although normally "G" distance apart can project beyond the bushings and be closer together. If this occurs, allow space between shaft ends for endfloat and misalignment.
** The MX50 coupling can only be outside-outside mount.

Parts

Flange		Tire	
Flange Part No.	List price $	Tire Part No.	List price $
MXF 50	37.00	P50	40.00
MXF 60	52.00	P60	47.00
MXF 70	68.00	P70	65.00
MXF 80	89.00	P80	87.00
MXF 90	121.00	P90	93.00
MXF 100	155.00	P100	101.00
MXF 110	171.00	P110	115.00
MXF 120	200.00	P120	129.00
MXF 140	354.00	P140	210.00
MXF 160	550.00	P160	252.00
MXF 200	790.00	P200	463.00

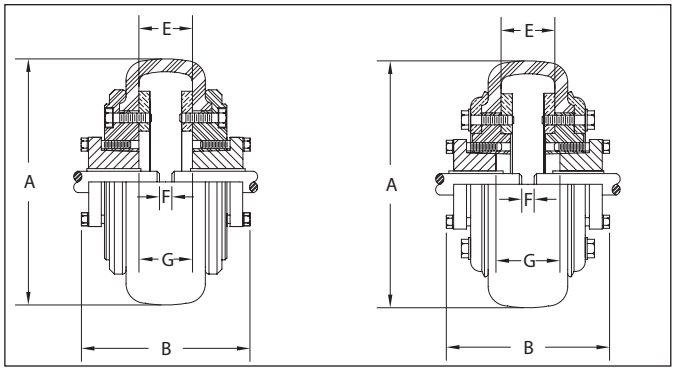

MX 50 TO MX 120

MX 140 TO MX 200

TYPE 1

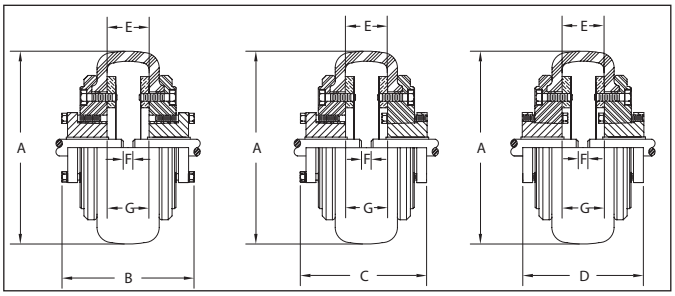

OUTSIDE-OUTSIDE MOUNT

OUTSIDE-INSIDE MOUNT

INSIDE-INSIDE MOUNT

TYPE 2

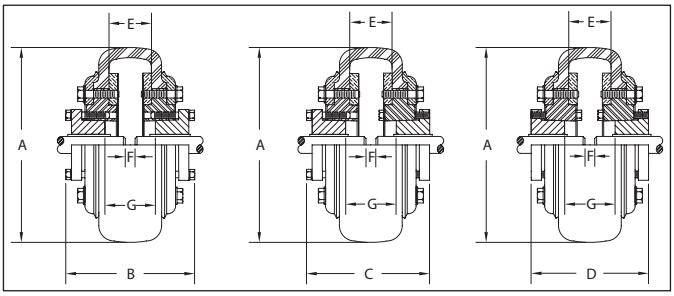

OUTSIDE-OUTSIDE MOUNT

OUTSIDE-INSIDE MOUNT

INSIDE-INSIDE MOUNT

COUPLING RATINGS & MISALIGNMENT

Coupling No.	Bush. Size	Max. Bore	Max RPM	HP per 100 RPM Service factors					Torque* @ 1.0 S.F. (LB in)	Average static torsional stiffness coefficient (H)		Approx. WR2 (LB-FT2)	Max. parallel misalignment	Max. axial misalignment
				1.0	1.5	2.0	2.5	3.0		LB-IN/ DEG.	LB-IN/ RAD.			
MX 50	JA	1 1/4	4500	1.43	.95	.72	.57	.48	900	224	12,850	.08	3/64	1/16
MX 60	SH	1 5/8	4000	2.86	1.91	1.43	1.14	.95	1,800	414	23,700	.24	1/16	5/64
MX 70	SDS	1 15/16	3600	3.49	2.33	1.75	1.40	1.16	2,200	544	31,200	.45	5/64	3/32
MX 80	SK	2 1/2	3100	5.71	3.81	2.86	2.28	1.90	3,600	876	50,200	.88	5/64	7/64
MX 90	SK	2 1/2	2800	6.90	4.60	3.45	2.76	2.30	4,350	1,088	62,400	1.60	3/32	1/8
MX 100	SF	2 3/4	2600	8.33	5.55	4.17	3.33	2.78	5,250	1,530	87,700	2.90	7/64	1/8
MX 110	SF	2 3/4	2300	12.30	8.20	6.15	4.92	4.10	7,750	2,420	138,700	4.30	7/64	9/64
MX 120	E	3 7/16	2100	19.90	13.27	9.95	7.96	6.63	12,540	4,014	217,000	6.70	1/8	5/32
MX 140	F	3 15/16	1840	43.78	29.19	21.89	17.51	14.59	27,590	8,296	476,000	19.50	9/64	3/16
MX 160	J	4	1560	59.98	39.99	29.99	23.99	19.99	37,800	12,000	688,000	34.60	11/64	13/64
MX 200	J	4	1300	130.90	87.27	65.45	52.36	43.63	82,500	29,000	1,662,000	103.00	13/64	17/64

* To obtain the maximal torque, multiply by 2.5 the nominal torque. (X-Tork tire)

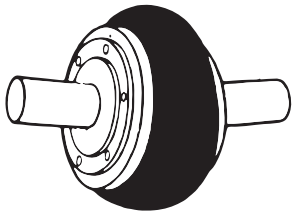

Max. angular misalignment: 4°

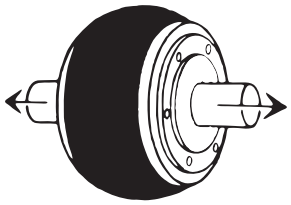

Max. axial misalignment: see Table above

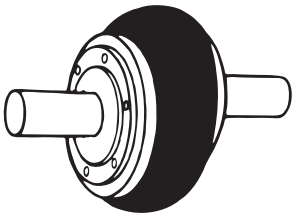

Max. parallel misalignment: see Table above

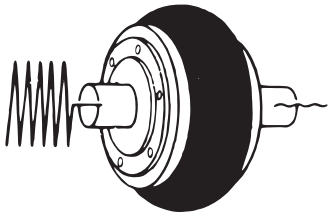

Dampens vibrations

MASKA FLEX

COUPLING SELECTION - SERVICE FACTORS

860 RPM MOTORS						
HP	COMPUTER HP / 100 RPM FOR 860 RPM MOTOR	SERVICE FACTOR				
		1.0	1.5	2.0	2.5	3.0
1/2	.058	*50JA	*50JA	*50JA	*50JA	*50JA
3/4	.087	*50JA	*50JA	*50JA	*50JA	*50JA
1	.116	*50JA	*50JA	*50JA	*50JA	*50JA
1 1/2	.174	*50JA	*50JA	*50JA	*50JA	*50JA
2	.232	*50JA	*50JA	*50JA	*50JA	*50JA
3	.349	*50JA	*50JA	*50JA	*50JA	*50JA
5	.581	*50JA	*50JA	*50JA	60SH	60SH
7 1/2	.872	*50JA	*50JA	60SH	60SH	60SH
10	1.16	*50JA	60SH	60SH	70SDS	70SDS
15	1.74	60SH	60SH	70SDS	80SK	80SK
20	2.33	60SH	70SDS	80SK	90SK	100SF
25	2.91	70SDS	80SK	90SK	100SF	110SF
30	3.49	70SDS	80SK	100SF	110SF	110SF
40	4.65	80SK	100SF	110SF	110SF	120E
50	5.81	90SK	110SF	110SF	120E	120E
60	6.98	100SF	110SF	120E	120E	140F
75	8.72	110SF	120E	120E	140F	140F
100	11.63	110SF	120E	140F	140F	140F

1160 RPM MOTORS						
HP	COMPUTER HP / 100 RPM FOR 1160 RPM MOTOR	SERVICE FACTOR				
		1.0	1.5	2.0	2.5	3.0
3/4	.065	*50JA	*50JA	*50JA	*50JA	*50JA
1	.086	*50JA	*50JA	*50JA	*50JA	*50JA
1 1/2	.129	*50JA	*50JA	*50JA	*50JA	*50JA
2	.172	*50JA	*50JA	*50JA	*50JA	*50JA
3	.259	*50JA	*50JA	*50JA	*50JA	*50JA
5	.431	*50JA	*50JA	*60JA	*50JA	*50JA
7 1/2	.647	*50JA	*50JA	*50JA	60SH	60SH
10	.862	*50JA	*50JA	60SH	60SH	60SH
15	1.29	*50JA	60SH	60SH	70SDS	80SK
20	1.72	60SH	60SH	70SDS	80SK	80SK
25	2.16	60SH	70SDS	80SK	80SK	90SK
30	2.59	60SH	80SK	80SK	90SK	100SF
40	3.45	70SDS	80SK	90SK	110SF	110SF
50	4.31	80SK	90SK	110SF	110SF	120E
60	5.17	80SK	100SF	110SF	120E	120E
75	6.47	90SK	110SF	120E	120E	120E
100	8.62	110SF	120E	120E	140F	140F
125	10.78	110SF	120E	140F	140F	140F

Bushing sizes shown above may not always have shaft size capacity capabilities.
* 50JA MASKAFLEX couplings are outside-outside mount only.

1750 RPM MOTORS						
HP	COMPUTER HP / 100 RPM FOR 1750 RPM MOTOR	SERVICE FACTOR				
		1.0	1.5	2.0	2.5	3.0
1	.057	*50JA	*50JA	*50JA	*50JA	*50JA
1 1/2	.086	*50JA	*50JA	*50JA	*50JA	*50JA
2	.114	*50JA	*50JA	*50JA	*50JA	*50JA
3	.171	*50JA	*50JA	*50JA	*50JA	*50JA
5	.286	*50JA	*50JA	*50JA	*50JA	*50JA
7 1/2	.429	*50JA	*50JA	*50JA	*50JA	*50JA
10	.571	*50JA	*50JA	*50JA	*50JA	*50JA
15	.857	*50JA	*50JA	60SH	60SH	60SH
20	1.14	*50JA	60SH	60SH	60SH	70SDS
25	1.43	*50JA	60SH	60SH	80SK	80SK
30	1.71	60SH	60SH	70SDS	80SK	80SK
40	2.28	60SH	70SDS	80SK	80SK	90SK
50	2.86	60SH	80SK	80SK	100SF	110SF
60	3.43	70SDS	80SK	90SK	110SF	110SF
75	4.28	80SK	90SK	110SF	110SF	120E
100	5.71	80SK	110SF	110SF	120E	120E
125	7.14	100SF	110SF	120E	120E	140F
150	8.57	110SF	120E	120E	140F	140F
200	11.43	110SF	120E	140F	140F	140F

3500 RPM MOTORS						
HP	COMPUTER HP / 100 RPM FOR 3500 RPM MOTOR	SERVICE FACTOR				
		1.0	1.5	2.0	2.5	3.0
1 1/2	.044	*50JA	*50JA	*50JA	*50JA	*50JA
2	.057	*50JA	*50JA	*50JA	*50JA	*50JA
3	.086	*50JA	*50JA	*50JA	*50JA	*50JA
5	.143	*50JA	*50JA	*50JA	*50JA	*50JA
7 1/2	.214	*50JA	*50JA	*50JA	*50JA	*50JA
10	.286	*50JA	*50JA	*50JA	*50JA	*50JA
15	.429	*50JA	*50JA	*50JA	*50JA	*50JA
20	.571	*50JA	*50JA	*50JA	*50JA	60SH
25	.714	*50JA	*50JA	*50JA	60SH	60SH
30	.857	*50JA	*50JA	60SH	60SH	60SH
40	1.14	*50JA	60SH	60SH	70SDS	70SDS
50	1.428	*50JA	60SH	60SH	--	--
60	1.71	60SH	60SH	70SDS	--	--
75	2.14	60SH	70SDS	--	--	--
100	2.86	60SH	--	--	--	--
125		--	--	--	--	--
150		--	--	--	--	--
200		--	--	--	--	--
250		--	--	--	--	--

Bushing sizes shown above may not always have shaft size capacity capabilities.
* 50JA MASKAFLEX couplings are outside-outside mount only.

BELTS

IMPORTANT REMINDER

When using ARAMID FIBER REINFORCED (KEVLAR) BELTS be sure NOT to tension at higher force than recommended for standard conventional construction belts.

Specially designed sheaves may be required to match drive specification when using this type of belts. Higher tension may result in body injury and premature failure of bearings and other drive components.

V-BELTS

Classical
A(4L), B(5L), C, D, E

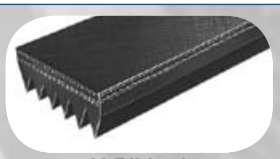

V-Ribbed
J, K, L, M

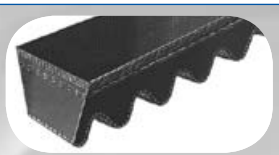

Classical Cogged
AX, BX, CX

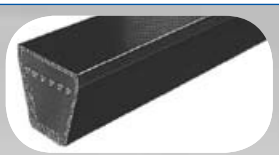

Narrow
3V, 5V, 8V

Narrow Cogged
3VX, 5VX

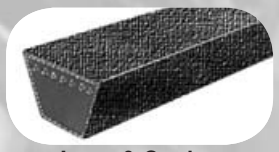

Lawn & Garden

Classical Banded
B, C, D

Narrow Banded
3V, 5V, 8V

Double V
AA, BB, CC, DD

Variable Speed
English & Metric

SP Metric
SPZ, SPA, SPB, SPC

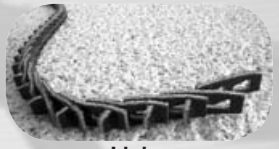

Link
3L, A, B, C, BB, CC

SYNCHRONOUS BELTS

Curvilinear Synchronous
3M, 5M, 8M, 14M

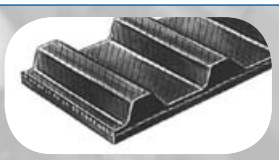

Trapezoidal Synchronous
MXL, XL, L, H, XH, XXH

Dual Synchronous
DXL, DL, DH, D5M, D8M, D14M

BELT TENSIONING INSTRUCTIONS

V-Belts

V-belt tensioning adjustment can be made using a tensionmeter or other type spring scale, using the following procedure. After seating the belts in the groove and adjusting center distance so as to take up slack in the belts, further increase the tension until only a slight bow on the slack side is apparent while the drive is operating under load. Stop the drive, and using the meter, measure the force necessary to depress one of the center belts 1/64-inch for every inch of belt span (see sketch below). For example, a deflection for a 50-inch belt span is 50/64ths, or 25/32-inch. The amount of force required to deflect the belt should compare with the deflection forces noted in the chart on the following page. Also notice for V-belts that deflection forces vary from the initial "run-in" values which are greater (reflecting higher run-in tensioning) to the "normal" values for after the run-in period.

Synchronous Belts

High torque, Standard and Metric synchronous belts should be installed to fit pulleys snugly, neither too tight nor too loose. The belt's positive grip eliminates the need for high initial tension. When a belt is installed with a snug but not overly tight fit, longer belt life, less bearing wear and more quiet operation will result. Overtight belts can cause early failure and should be avoided. With high torque a loose belt may "jump teeth" upon startup. If such occurs, the tension should be increased gradually until satisfactory operation is achieved.

To properly tension a synchronous belt, place belt on pulleys and adjust takeup until the belt teeth mesh securely with the pulley grooves. Measure belt span "T". Then tighten belt so that it deflects 1/64-inch for every inch of belt span when a force as specified in the table below is applied to the top of the belt. For belts wider than two inches, a metal or wooden strip 3/4 to 1-inch wide should be placed across the belt between it and the tester to prevent distortion.

The following range of deflection forces are normally adequate for drive installation. Actual installation tension required depends on peak loads, system rigidity, number of teeth in mesh, etc.

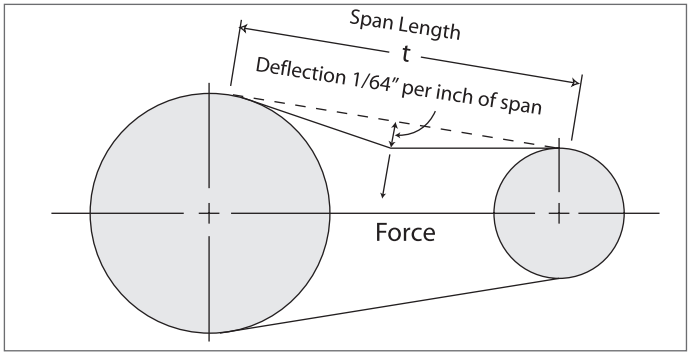

MEASURE THE SPAN LENGTH "T" AS SHOWN IN THE SKETCH ABOVE.

BELT TENSIONING

Standard V-Belt Tensioning Deflection Force

Belt Cross-Section	Smaller Pulley Diameter Range (in.)	Deflection Force	
		Run-in (lbs.)	Normal (lbs.)
A	3.0-3.6	3-3/8	2-1/4
	3.8-4.8	4-1/4	2-7/8
	5.0-7.0	5-1/8	3-3/8
AX	3.0-3.6	4-1/8	2-3/4
	3.8-4.8	5	3-1/4
	5.0-7.0	6	4
B	3.4-4.2	4	2-5/8
	4.4-5.2	6	4
	5.4-9.4	7-1/8	5-1/4
BX	3.4-4.2	5-1/4	3-1/2
	4.4-5.2	7-1/8	4-3/4
	5.4-9.4	9	6
C	7.0-9.0	11-1/4	7-1/2
	9.5-16.0	15-3/4	10-1/2
CX	7.0-9.0	13-1/2	9
	9.5-16.0	17-1/2	11-3/4
D	12.0-16.0	24-1/2	16-1/2
	18.0-22.0	33	22
E	21.6-27.0	48	32
3V	3.40-4.20	6	4
	4.20-10.6	7	5
3VX	2.20-3.65	7	5
	4.12-10.6	8	6
5V	7.10-10.9	16	8-12
	11.8-16.0	20	10-15
5VX	4.40-10.9	18	10-14
	11.8-16.0	22	12-18
8V	12.5-17.0	36	18-27
	18.0-22.4	40	20-30

Synchronous Belt Tensioning Deflection Force

Belt Pitch	Belt Width	Deflection Force
Synchron. 8MM (14mm)	20mm	2 to 4 lbs
	30mm	3 to 6 lbs
	50mm	7 to 11 lbs
	85mm	11 to 19 lbs
Synchron. 14MM (14mm)	40mm	5 to 11 lbs
	55mm	8 to 17 lbs
	85mm	14 to 27 lbs
	115mm	20 to 40 lbs
	170mm	30 to 60 lbs
MXL (.080-in.)	1/8-inch	1 oz
	3/16-inch	1 - 1-1/2 oz
	1/4-inch	2 oz
	5/16-inch	2 - 2-1/2 oz
XL (1/5-in.)	1/4-inch	2-1/2 oz
	5/16-inch	3 oz
	3/8-inch	3-1/2 oz
L (3/8-in.)	1/2-inch	7 oz
	3/4-inch	11 oz
	1-inch	1 lb
H (1/2-in.)	3/4-inch	2 lbs
	1-inch	2-1/2 lbs
	1-1/2-inch	4 lbs
	2-inch	5-1/2 lbs
	3-inch	8-1/2 lbs
XH (7/8-in.)	2-inch	7-1/2 lbs
	3-inch	11-1/2 lbs
	4-inch	16-1/2 lbs
XXH (1-1/4-in.)	2-inch	9 lbs
	3-inch	14 lbs
	4-inch	20 lbs
	5-inch	26 lbs

V-Ribbed Belt Tensioning Deflection Force

Belt Cross Section	Small Sheave Diameter range	Force "F" Lbs. Per Rib
J	1.32-1.67	0.4
J	1.77-2.20	0.5
J	2.36-2.95	0.6
L	2.95-3.74	1.7
L	3.94-4.92	2.1
L	5.20-6.69	2.5
M	7.09-8.82	6.4
M	9.29-11.81	7.7
M	12.40-15.75	8.8

V-BELT DIMENSIONS

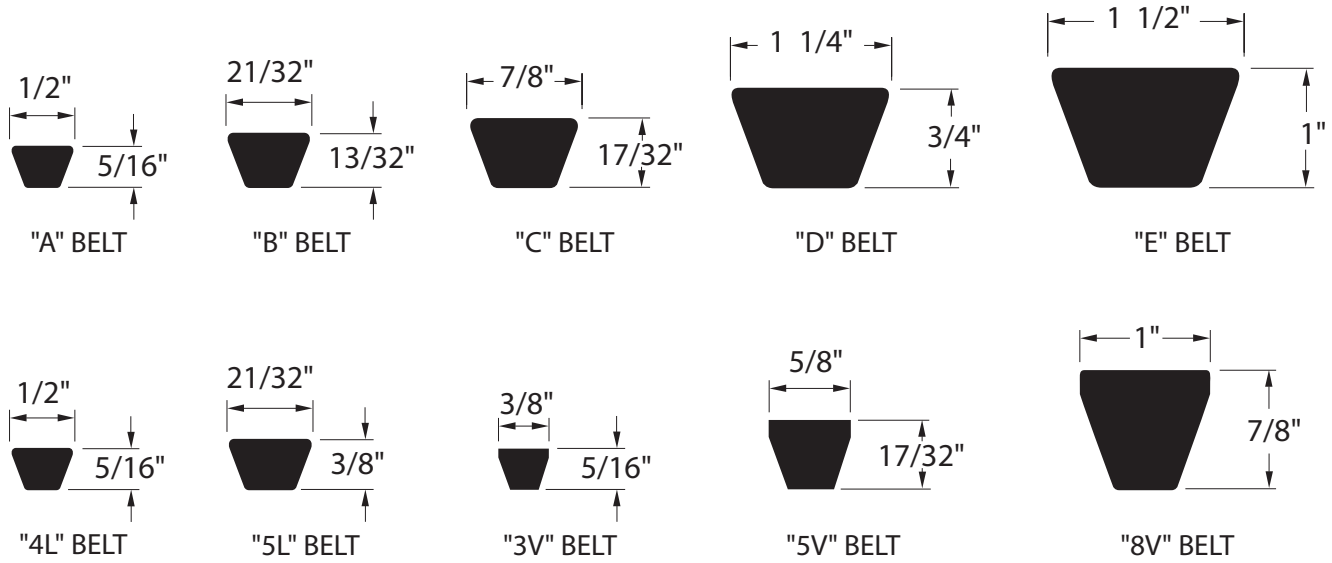

V-BELTS

IMPORTANT REMINDER

- **4L & 5L FHP belts can be crossed over to "A" & "B" classical V-belts. Refer to the following tables for cross references.**
- **Baldor does not recommend the use of two (2) or more 4L or 5L belts on the same drive as their length may not match perfectly.**

HOW TO ORDER

EXAMPLE: **VBB150 & VBB-LINK**

VB	B	150

VB: V-BELT
B: BELT SECTION ("B" CLASSICAL)
150: BELT NUMBER

CLASSICAL BELTS:

The belt number corresponds to the belt inside length. To determine the belt outside length for:

A-AX Sections: Up to belt number 210, add 2 to obtain outside length in inches.
B-BX Sections: Up to belt number 210, add 3 to obtain outside length in inches.
C-CX Sections: Up to belt number 210, add 4 to obtain outside length in inches.
D Section: Up to belt number 210, add 5 to obtain outside length in inches.

NARROW BELTS: Divide the belt number by 10 to obtain the belt outside length.

LINK: LINK BELTS: Sold in standard length of 25 feet.

CLASSICAL V-BELTS

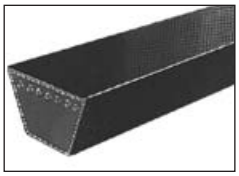

"A" SECTION

(1/2-INCH TOP WIDTH, 5/16-INCH THICK)

Belt No.	Cross Ref.	List Price $	Approx. Weight (lbs)
A18		10.00	.10
A19	4L210	10.00	.10
A20	4L220	10.00	.10
A21	4L230	10.16	.10
A22	4L240	10.16	.15
A23	4L250	10.24	.20
A24	4L260	10.32	.20
A25	4L270	10.40	.20
A26	4L280	10.40	.20
A27	4L290	10.56	.20
A28	4L300	10.80	.20
A29	4L310	10.96	.20
A30	4L320	11.20	.20
A31	4L330	11.20	.20
A32	4L340	11.36	.20
A33	4L350	11.60	.20
A34	4L360	11.76	.20
A35	4L370	12.00	.20
A36	4L380	12.00	.20
A37	4L390	12.00	.20
A38	4L400	12.80	.20
A39	4L410	13.28	.20
A40	4L420	13.36	.20
A41	4L430	13.44	.20
A42	4L440	13.60	.20
A43	4L450	14.00	.30
A44	4L460	14.08	.30
A45	4L470	14.24	.30
A46	4L480	14.40	.30
A47	4L490	14.64	.30
A48	4L500	14.80	.30
A49	4L510	14.96	.30
A50	4L520	15.04	.30
A51	4L530	15.20	.30
A52	4L540	15.28	.30
A53	4L550	15.60	.30
A54	4L560	16.00	.30
A55	4L570	16.00	.30
A56	4L580	16.40	.30
A57	4L590	16.48	.30
A58	4L600	16.56	.30
A59	4L610	16.64	.30
A60	4L620	16.80	.30
A61	4L630	17.04	.30
A62	4L640	17.20	.30

Belt No.	Cross Ref.	List Price $	Approx. Weight (lbs)
A63	4L650	17.60	.30
A64	4L660	17.84	.30
A65	4L670	18.00	.30
A66	4L680	18.00	.40
A67	4L690	18.24	.40
A68	4L700	18.40	.40
A69	4L710	19.20	.40
A70	4L720	19.20	.40
A71	4L730	19.28	.40
A72	4L740	19.44	.40
A73	4L750	19.60	.40
A74	4L760	19.76	.40
A75	4L770	20.00	.40
A76	4L780	20.32	.40
A77	4L790	20.48	.40
A78	4L800	20.80	.40
A79	4L810	21.20	.40
A80	4L820	21.60	.40
A81	4L830	22.00	.40
A82	4L840	22.24	.40
A83	4L850	22.56	.40
A84	4L860	22.80	.40
A85	4L870	23.20	.40
A86	4L880	23.52	.40
A87	4L890	23.84	.40
A88	4L900	24.16	.40
A89	4L910	24.24	.40
A90	4L920	24.80	.40
A91	4L930	25.12	.50
A92	4L940	25.36	.50
A93	4L950	25.60	.50
A94	4L960	25.92	.50
A95	4L970	26.16	.50
A96	4L980	26.40	.50
A97	4L990	26.72	.50
A98	4L1000	27.04	.50
A99	4L1010	27.28	.50
A100	4L1020	27.52	.50
A101		27.76	.50
A102		28.00	.50
A103		28.28	.50
A104		28.56	.50
A105		28.80	.50
A106		29.60	.55
A107		30.00	.60
A108		30.40	.60
(A109)		30.80	.65

Belt No.	Cross Ref.	List Price $	Approx. Weight (lbs)
A110		31.20	.70
(A111)		31.60	.75
A112		32.00	.80
(A113)		32.32	.80
A114		32.64	.80
A115		32.96	.80
A116		33.28	.80
A118		33.92	.80
(A119)		34.16	.80
A120		34.40	.80
A124		35.60	.80
(A125)		35.90	.80
A128		36.80	.80
A130		37.36	.80
(A132)		37.88	.80
(A133)		38.14	.80
A134		38.40	.80
(A135)		38.62	.90
A136		38.88	.90
(A137)		39.16	.90
(A140)		40.00	.95
A144		41.12	1.00
(A148)		42.30	1.02
(A152)		43.46	1.05
A156		44.62	1.10
(A157)		44.90	1.10
A158		45.20	1.10
(A160)		45.60	1.10
(A162)		46.00	1.10
(A167)		46.90	1.13
A173		48.00	1.15
A180		49.20	1.15
(A187)		50.00	1.22
(A196)		51.00	1.31
(A197)		53.00	1.31
(A210)		53.80	1.32
A221		59.46	1.40
(A256)		68.88	1.60
(A258)		69.42	1.60

( ) = Not in stock. Contact Baldor for price and delivery.

"B" SECTION

(21/32-INCH TOP WIDTH, 13/32-INCH THICK)

Belt No.	Cross Ref.	List Price $	Approx. Weight (lbs)
(B20)		14.00	.40
(B21)		14.00	.40
B22	5L250	14.00	.40
B23	5L260	14.00	.40
B24	5L270	14.40	.40
B25	5L280	14.80	.40
B26	5L290	15.04	.40
B27	5L300	15.12	.40
B28	5L310	15.20	.40
B29	5L320	15.36	.40
B30	5L330	15.44	.40
B31	5L340	15.60	.40
B32	5L350	15.68	.40
B33	5L360	15.92	.40
B34	5L370	15.92	.40
B35	5L380	16.00	.40
B36	5L390	16.40	.40
B37	5L400	17.20	.40
B38	5L410	17.60	.40
B39	5L420	18.16	.40
B40	5L430	18.32	.40
B41	5L440	18.40	.40
B42	5L450	19.20	.40
B43	5L460	19.44	.40
B44	5L470	19.44	.40
B45	5L480	20.00	.40
B46	5L490	20.80	.50
B47	5L500	20.92	.50
B48	5L510	21.60	.50
B49	5L520	21.76	.50
B50	5L530	22.00	.50
B51	5L540	22.40	.50
B52	5L550	22.48	.50
B53	5L560	22.80	.50
B54	5L570	23.04	.50
B55	5L580	23.20	.60
B56	5L590	23.36	.60
B57	5L600	23.44	.60
B58	5L610	23.52	.60
B59	5L620	23.92	.60
B60	5L630	24.00	.60
B61	5L640	24.40	.70
B62	5L650	24.80	.70
B63	5L660	24.96	.70
B64	5L670	25.12	.70

Belt No.	Cross Ref.	List Price $	Approx. Weight (lbs)
B65	5L680	25.28	.70
B66	5L690	25.92	.70
B67	5L700	26.16	.70
B68	5L710	26.40	.70
B69	5L720	27.52	.70
B70	5L730	28.00	.70
B71	5L740	28.16	.70
B72	5L750	28.40	.70
B73	5L760	28.56	.70
B74	5L770	28.72	.70
B75	5L780	28.80	.70
B76	5L790	29.44	.70
B77	5L800	29.92	.80
B78	5L810	30.00	.80
B79	5L820	30.48	.80
B80	5L830	30.96	.80
B81	5L840	31.20	.80
B82	5L850	31.60	.80
B83	5L860	32.24	.80
B84	5L870	32.40	.80
B85	5L880	32.80	.80
B86	5L890	33.12	.80
B87	5L900	33.44	.80
B88	5L910	33.76	.80
B89	5L920	34.08	.80
B90	5L930	34.40	.90
B91	5L940	34.72	.90
B92	5L950	35.04	.90
B93	5L960	35.36	.90
B94	5L970	35.76	.90
B95	5L980	36.08	.90
B96	5L990	36.40	.90
B97	5L1000	37.60	.90
B98	5L1010	37.84	.90
B99	5L1020	38.32	1.00
B100		38.32	1.00
B101		38.56	1.00
B102		38.80	1.00
B103		38.96	1.00
B104		39.20	1.00
B105		40.00	1.00
B106		40.80	1.00
B107		41.20	1.00
B108		41.36	1.00
B109		41.84	1.10

Belt No.	List Price $	Approx. Weight (lbs)
B110	42.32	1.10
B111	42.76	1.10
B112	43.20	1.10
B113	43.60	1.20
B114	44.00	1.20
B115	44.16	1.20
B116	44.40	1.20
(B117)	44.72	1.20
B118	45.04	1.20
B119	45.32	1.20
B120	45.60	1.20
B122	46.40	1.20
B124	47.20	1.20
B125	47.60	1.20
B126	48.00	1.20
B127	48.40	1.20
B128	48.80	1.30
B130	49.28	1.30
B131	49.52	1.30
B132	49.76	1.30
B133	50.00	1.30
B134	50.16	1.30
B135	50.40	1.30
B136	51.20	1.30
B138	52.20	1.30
B140	53.20	1.40
B141	53.70	1.40
(B142)	54.20	1.40
(B143)	54.70	1.40
B144	55.20	1.40
B146	56.00	1.40
B147	56.40	1.40
B148	56.80	1.40
(B149)	57.04	1.50
B150	57.28	1.50
B151	57.64	1.50
B152	58.00	1.50
B153	58.32	1.50
B154	58.64	1.50
(B155)	59.00	1.50
B156	59.34	1.50
B157	59.68	1.50
B158	60.00	1.50
B160	60.80	1.50
(B161)	61.20	1.50

( ) = Not in stock. Contact Baldor for price and delivery.

"B" SECTION (21/32-INCH TOP WIDTH, 13/32-INCH THICK)

Belt No.	List Price $	Approx. Weight (lbs)
B162	61.60	1.50
B163	62.00	1.50
(B164)	62.50	1.50
B165	63.00	1.50
(B166)	63.34	1.50
B168	63.98	1.50
(B169)	64.30	1.50
(B170)	64.62	1.50
B173	65.60	1.50
B175	66.56	1.50
B177	67.46	1.50
B178	67.90	1.50
B180	68.80	1.50
B182	69.56	1.50
B184	70.32	1.50
(B185)	70.70	1.90
B187	71.44	1.90
(B188)	71.80	1.90
B190	72.54	1.90
B192	73.28	2.00
B193	73.66	2.00
B195	74.40	2.00
(B197)	75.14	2.00

Belt No.	List Price $	Approx. Weight (lbs)
B199	75.88	2.00
B201	76.64	2.00
B204	77.76	2.00
(B205)	78.14	2.00
B210	80.00	2.00
B212	80.36	2.25
(B215)	80.90	2.25
(B216)	81.08	2.25
B217	81.28	2.25
(B218)	81.46	2.25
B221	82.00	2.25
B223	84.48	2.25
B224	84.80	2.30
B225	85.20	2.30
(B228)	86.16	2.30
(B229)	86.56	2.30
(B230)	86.90	2.30
(B234)	88.30	2.30
(B235)	88.66	2.30
(B236)	89.00	2.30
(B237)	89.36	2.30
(B239)	90.06	2.30
B240	90.40	2.30

Belt No.	List Price $	Approx. Weight (lbs)
B248	94.40	2.30
B253	96.72	2.30
(B255)	97.60	2.30
(B259)	98.88	2.30
(B265)	100.80	2.30
B270	102.40	2.30
(B276)	104.00	2.70
(B279)	104.80	2.70
(B285)	106.40	2.70
(B290)	109.40	2.70
(B292)	110.58	2.70
(B293)	110.96	2.70
(B300)	113.60	2.70
(B315)	119.20	2.90
B330	124.80	2.90
(B333)	126.00	2.90
B345	130.80	3.00
(B355)	150.30	3.10
B360	160.00	3.20
(B394)	175.10	3.50
(B433)	192.40	3.90
(B472)	209.80	4.20

( ) = Not in stock. Contact Baldor for price and delivery.

"C" SECTION (7/8-INCH TOP WITDH, 17/32-INCH THICK)

Belt No.	List Price $	Approx. Weight (lbs)
(C34)	30.40	.80
(C43)	30.40	.80
(C48)	33.60	.80
C51	36.80	.90
C52	37.60	.90
C53	38.40	.90
C54	39.40	1.00
C55	40.40	1.00
C60	43.20	1.10
C61	43.90	1.10
C62	44.60	1.10
C63	45.30	1.10
(C65)	46.70	1.10
C66	47.40	1.10
C68	48.80	1.10
C70	50.80	1.20
C72	51.52	1.20
C73	52.22	1.20
C75	53.60	1.20
C78	56.00	1.20
C80	57.60	1.20
C81	58.40	1.30
C82	58.80	1.30
C83	59.20	1.30
C85	60.00	1.40
C86	60.96	1.40
C88	62.90	1.40
C90	64.80	1.40
C92	66.10	1.40
C93	66.80	1.40

Belt No.	List Price $	Approx. Weight (lbs)
C94	67.50	1.40
C96	68.80	1.50
C97	69.20	1.80
C98	70.00	1.80
C99	70.00	1.80
C100	70.40	1.90
C102	71.20	1.90
(C104)	73.86	1.90
C105	75.20	1.90
(C106)	75.92	1.90
(C107)	76.20	1.90
(C108)	76.50	1.90
C109	76.80	1.90
C110	78.80	1.90
(C111)	79.40	1.95
C112	80.00	2.00
(C114)	81.06	2.00
C115	81.60	2.00
C116	82.08	2.00
C118	82.24	2.00
C120	85.60	2.10
C122	87.00	2.20
C124	88.40	2.20
(C126)	89.80	2.30
C128	91.20	2.30
C130	92.64	2.40
C134	95.44	2.40
C136	96.80	2.40
(C138)	98.20	2.40
(C139)	98.90	2.40
(C140)	99.60	2.40

Belt No.	List Price $	Approx. Weight (lbs)
(C141)	100.30	2.40
(C142)	101.00	2.40
(C143)	101.70	2.40
C144	102.40	2.40
(C146)	103.52	2.60
C148	104.64	2.60
C150	106.40	2.60
C151	107.00	2.60
(C153)	108.00	2.60
C154	110.00	2.70
C158	112.00	2.70
C162	114.40	2.70
C166	117.20	2.70
C168	118.72	2.70
(C169)	119.60	2.80
C173	122.40	3.00
(C175)	124.00	3.10
(C176)	124.80	3.20
C180	128.00	3.20
(C185)	131.60	3.20
(C188)	133.80	3.20
C190	135.20	3.20
(C194)	137.76	3.30
C195	138.40	3.40
(C202)	143.60	3.60
C204	145.12	3.60
(C207)	148.12	3.65
C208	148.12	3.65
C210	149.60	3.70
(C214)	152.00	3.80
(C217)	153.88	3.90

Belt No.	List Price $	Approx. Weight (lbs)
(C218)	154.50	3.90
(C220)	155.80	4.10
C225	158.80	4.40
C228	160.64	4.40
(C235)	165.00	4.80
(C238)	166.80	4.80
C240	168.00	4.80
(C245)	170.80	5.00
C248	172.40	5.00
(C255)	180.80	5.00
C270	189.60	5.40
C276	193.44	5.40
(C285)	199.20	5.60
C297	208.16	5.60
C300	210.40	5.60
(C303)	212.72	5.60
(C314)	220.00	5.60
C315	222.00	5.60
C330	231.20	5.70
C345	242.80	6.60
C360	252.00	7.00
(C390)	273.60	7.40
(C420)	294.40	7.80

( ) = Not in stock. Contact Baldor for price and delivery.

CLASSICAL COGGED V-BELTS

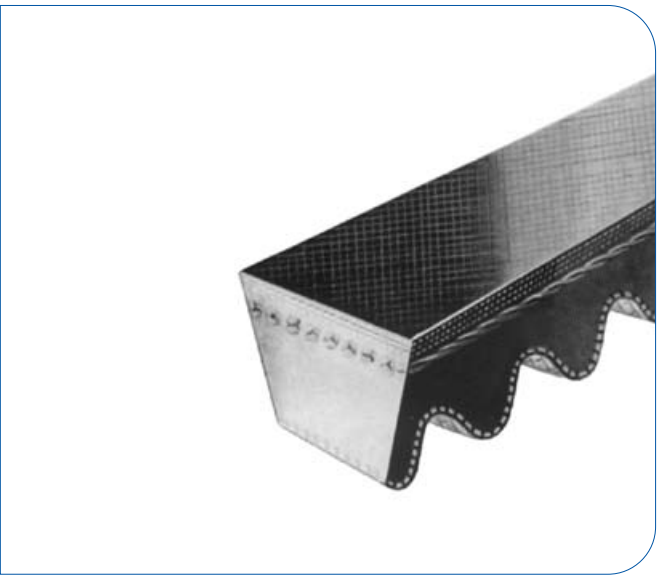

DID YOU KNOW THAT...

- OIL AND HEAT-RESISTANT. STATIC DISSIPATING. RMA multiple V-belts in a raw edge, cogged construction are especially useful for compact drives and high ratios.

"AX" SECTION

(1/2-INCH TOP WIDTH, 5/16-INCH THICK)

Belt No.	List Price $	Approx. Weight (lbs)
(AX22)	20.80	.17
AX23	20.80	.17
AX24	20.80	.17
(AX25)	20.80	.18
AX26	20.80	.18
(AX27)	20.80	.19
AX28	20.80	.19
AX29	20.80	.20
AX30	22.08	.20
AX31	22.40	.21
AX32	22.80	.21
AX33	23.20	.22
AX34	23.68	.23
AX35	24.00	.24
AX36	24.48	.24
AX37	25.12	.25
AX38	25.60	.26

Belt No.	List Price $	Approx. Weight (lbs)
AX39	26.08	.26
AX40	26.56	.26
AX41	27.04	.27
AX42	27.52	.28
AX43	28.00	.29
AX44	28.40	.30
(AX45)	28.60	.31
AX46	28.80	.31
(AX47)	29.12	.32
AX48	29.44	.32
(AX49)	29.76	.33
AX50	30.08	.33
AX51	30.40	.34
(AX52)	30.72	.35
AX53	31.04	.35
AX54	31.52	.36
AX55	31.84	.36

Belt No.	List Price $	Approx. Weight (lbs)
AX56	32.16	.37
(AX58)	32.88	.40
(AX59)	33.24	.40
AX60	33.60	.40
AX61	34.00	.41
AX62	34.40	.41
AX63	34.80	.42
AX64	35.20	.42
(AX65)	35.60	.43
AX66	36.00	.43
AX67	36.40	.44
AX68	36.80	.45
(AX69)	38.28	.46
AX70	38.40	.46
AX71	38.72	.47
(AX72)	39.04	.47
AX75	40.00	.49

Belt No.	List Price $	Approx. Weight (lbs)
(AX76)	40.64	.50
(AX77)	41.28	.50
AX78	41.92	.51
AX80	43.20	.52
(AX84)	45.76	.55
AX85	46.40	.55
AX86	47.04	.56
AX90	49.60	.59
AX96	52.80	.62
(AX99)	54.40	.64
AX100	54.94	.65
AX105	57.60	.68
(AX108)	60.28	.70
AX110	62.08	.71
AX112	64.00	.73
AX120	68.80	.74
AX128	73.60	.78
AX136	78.20	.83

( ) = Not in stock. Contact Baldor for price and delivery.

"BX" SECTION
(21/32-INCH TOP WIDTH, 13/32-INCH THICK)

Belt No.	List Price $	Approx. Weight (lbs)
BX31	32.00	.36
BX32	32.00	.37
(BX33)	32.00	.39
BX34	32.00	.39
BX35	32.00	.40
BX36	32.96	.42
BX37	34.28	.43
BX38	35.20	.43
BX39	35.20	.45
BX40	36.80	.46
BX41	37.60	.47
BX42	38.40	.48
BX43	39.20	.49
(BX44)	40.00	.50
BX45	40.80	.51
BX46	41.60	.52
BX47	42.24	.53
BX48	42.88	.54
BX49	43.52	.55
BX50	44.16	.56
BX51	44.80	.57
BX52	45.28	.58

Belt No.	List Price $	Approx. Weight (lbs)
BX53	45.60	.59
BX54	46.08	.60
BX55	46.40	.61
BX56	46.72	.62
BX57	47.04	.63
BX58	47.36	.64
BX59	47.68	.66
BX60	48.00	.67
BX61	48.64	.68
BX62	49.28	.69
BX63	49.92	.70
BX64	50.56	.71
BX65	51.20	.72
BX66	51.84	.73
BX67	52.32	.74
BX68	52.80	.75
(BX69)	53.52	.76
BX70	54.24	.77
BX71	54.88	.78
BX73	57.60	.80
(BX74)	57.60	.81
BX75	57.60	.82

Belt No.	List Price $	Approx. Weight (lbs)
(BX76)	58.40	Òw¢
BX77	59.20	.85
BX78	60.00	.86
BX79	60.80	.87
BX80	61.60	.88
BX81	62.40	.89
BX82	64.00	.90
BX83	64.48	.91
BX84	65.60	.92
BX85	65.60	.93
BX90	68.80	.98
(BX91)	69.90	.99
(BX92)	71.00	1.00
BX93	72.00	1.01
BX95	73.60	1.03
BX96	74.40	1.05
BX97	75.20	1.06
BX99	76.32	1.08
BX100	76.80	1.09
BX103	78.40	1.12
BX105	80.00	1.14
BX108	83.04	1.17

Belt No.	List Price $	Approx. Weight (lbs)
BX112	86.40	1.22
(BX113)	87.04	1.22
(BX115)	88.20	1.25
BX116	88.80	1.26
BX120	91.20	1.30
BX124	94.40	1.30
BX128	97.60	1.30
BX133	102.40	1.34
BX136	104.32	1.37
BX144	110.40	1.45
BX150	114.56	1.51
BX158	120.00	1.59
BX162	124.84	1.63
BX173	131.20	1.74
BX180	137.60	1.81
BX195	148.80	1.96
(BX210)	*	2.10
(BX225)	*	2.25
(BX240)	*	2.36
(BX270)	*	2.66
(BX300)	*	2.95

"CX" SECTION
(7/8-INCH TOP WIDTH, 17/32-INCH THICK)

Belt No.	List Price $	Approx. Weight (lbs)
CX51	73.60	1.07
CX60	86.40	1.24
(CX67)	96.20	1.37
CX68	97.60	1.39
(CX72)	103.10	1.47
CX75	107.20	1.53
(CX76)	108.80	1.55
(CX78)	112.00	1.59
(CX80)	115.20	1.62
CX81	116.80	1.64
(CX82)	117.60	1.66
(CX83)	118.40	1.68
CX85	120.00	1.72

Belt No.	List Price $	Approx. Weight (lbs)
(CX88)	125.76	1.77
CX90	129.60	1.81
(CX92)	132.26	1.85
(CX94)	134.94	1.89
(CX95)	136.26	1.91
CX96	137.60	1.93
(CX98)	140.44	1.97
(CX100)	143.28	2.01
(CX103)	147.54	2.06
CX105	150.40	2.10
(CX107)	153.12	2.14
CX109	155.84	2.18
(CX110)	157.20	2.20

Belt No.	List Price $	Approx. Weight (lbs)
CX112	160.00	2.24
CX115	164.16	2.29
CX120	171.20	2.39
(CX123)	176.64	2.40
CX128	182.40	2.42
CX133	188.80	2.47
CX136	192.64	2.49
CX144	204.80	2.63
CX150	212.16	2.75
CX158	224.00	2.90
CX162	228.80	2.95
CX173	244.80	3.15

Belt No.	List Price $	Approx. Weight (lbs)
(CX180)	256.00	3.27
(CX187)	266.64	3.39
(CX190)	271.20	3.46
CX195	276.80	3.55
(CX210)	*	3.77
(CX225)	*	4.04
(CX240)	*	4.30
(CX255)	*	4.58
(CX270)	*	4.85
(CX300)	*	5.39
(CX330)	*	5.93
(CX360)	*	6.47

( ) = Not in stock. Contact Baldor for price and delivery.

NARROW V-BELTS

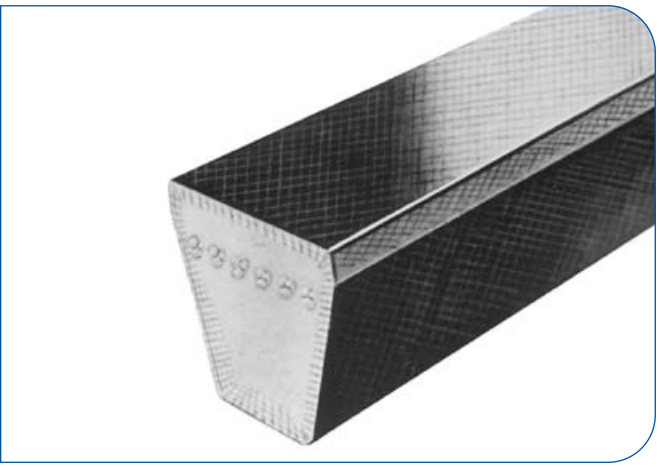

DID YOU KNOW THAT...

- OIL AND HEAT-RESISTANT. STATIC DISSIPATING. A more narrow, deeper wedge shape with more efficient load carrying characteristics and higher power capability that results in smaller, more compact drives.
- These belts are conform to RMA Engineering Standard IP-22. Stock Baldor•Maska narrow V-belts are listed below. In-between lengths and lengths over 600 inches are available on special order.

"3V" SECTION

(3/8-INCH TOP WIDTH, 5/16-INCH THICK)

Belt No.	List Price $	Approx. Weight (lbs)
3V250	15.60	.10
3V265	16.00	.10
3V280	16.40	.10
3V300	16.80	.10
3V315	17.60	.10
3V335	18.00	.20
3V355	18.80	.20
3V375	19.20	.20
3V400	20.40	.20

Belt No.	List Price $	Approx. Weight (lbs)
3V425	21.20	.20
3V450	22.00	.20
3V475	22.80	.20
3V500	23.20	.20
3V530	24.00	.20
3V560	24.80	.20
3V600	26.00	.20
3V630	26.80	.30
(3V650)	27.40	.30

Belt No.	List Price $	Approx. Weight (lbs)
3V670	28.00	.30
3V710	29.60	.30
(3V730)	30.40	.30
3V750	31.20	.30
3V800	33.20	.30
3V830	35.60	.35
3V850	35.60	.40
3V900	38.40	.40

Belt No.	List Price $	Approx. Weight (lbs)
3V950	40.40	.40
3V1000	42.80	.40
3V1060	45.20	.40
3V1120	49.20	.50
3V1180	52.40	.50
3V1250	56.00	.60
3V1320	59.20	.60
3V1400	62.80	.70

"5V" SECTION

(5/8-INCH TOP WIDTH, 17/32-INCH THICK)

Belt No.	List Price $	Approx. Weight (lbs)
5V500	49.20	.60
5V530	51.20	.70
5V560	53.60	.70
5V600	58.00	.70
(5V630)	60.80	.70
5V670	64.80	.80
5V710	68.80	.80
5V750	72.80	.80
5V800	77.60	.90
5V850	83.60	.90

Belt No.	List Price $	Approx. Weight (lbs)
5V900	86.80	.90
5V950	93.20	.90
(5V975)	95.80	1.00
5V1000	98.40	1.10
(5V1020)	100.40	1.10
5V1060	104.40	1.10
5V1120	110.40	1.20
5V1180	116.40	1.30
5V1250	123.60	1.30
5V1320	130.40	1.40

Belt No.	List Price $	Approx. Weight (lbs)
5V1400	137.60	1.50
5V1500	148.00	1.60
5V1600	158.00	1.70
(5V1630)	161.20	1.80
5V1700	168.00	1.80
(5V1710)	169.04	1.84
5V1800	178.40	2.20
5V1900	188.80	2.20
5V2000	199.20	2.20
5V2120	211.60	2.40

Belt No.	List Price $	Approx. Weight (lbs)
(5V2150)	214.70	2.48
5V2240	224.00	2.70
5V2360	235.20	2.80
5V2500	249.20	3.00
(5V2650)	264.80	3.10
5V2800	279.20	3.30
5V3000	298.80	3.50
(5V3150)	313.60	3.80
(5V3350)	333.60	3.90
(5V3550)	353.60	4.00

( ) = Not in stock. Contact Baldor for price and delivery.

"8V" SECTION
(1-INCH TOP WIDTH, 7/8-INCH THICK)

Belt No.	List Price $	Approx. Weight (lbs)
(8V1000)	188.00	3.50
(8V1060)	199.20	3.70
(8V1120)	210.80	3.90
8V1180	222.40	4.20
8V1250	235.60	4.40
8V1320	248.80	4.70
8V1400	264.00	4.90
8V1500	283.20	5.20
8V1600	302.00	5.60
(8V1650)	313.00	5.75

Belt No.	List Price $	Approx. Weight (lbs)
8V1700	324.00	5.90
8V1800	340.16	6.30
8V1900	361.20	6.70
8V2000	380.80	7.00
8V2120	404.40	7.50
8V2240	426.40	7.90
(8V2300)	437.40	8.10
8V2360	448.40	8.30
8V2500	474.80	8.80
(8V2550)	484.40	8.97

Belt No.	List Price $	Approx. Weight (lbs)
8V2650	503.60	9.30
8V2800	533.20	9.80
8V3000	571.20	10.50
8V3150	600.40	11.10
(8V3300)	629.50	11.63
8V3350	639.20	11.80
8V3550	677.20	12.50
(8V3600)	686.74	12.90
(8V3750)	716.00	13.30
(8V4000)	765.60	14.00

Belt No.	List Price $	Approx. Weight (lbs)
(8V4250)	815.20	14.90
(8V4500)	864.80	15.80
(8V4750)	914.40	16.40
(8V5000)	964.00	17.20
(8V5600)	1083.20	19.00

( ) = Not in stock. Contact Baldor for price and delivery.

LINK V-BELTS

Accu-Link
3L, A, B, C

Solve a V-Belt Drive breakdown quickly

DID YOU KNOW THAT...

- The ideal temporary replacement, or permanent substitute, for conventional rubber V-Belts (not cogged)
- Designed to fit any drive application and diverse operating environments
- Quick, easy assembly to keep equipment up and running at the same HP ratings

LINK V-BELTS

Part No.	List Price* $
VB3L-LINK	29.04
VBA-LINK	29.60
VBB-LINK	34.48
VBC-LINK	52.08

* Qty 1 = 1 foot

BELTS

NARROW COGGED V-BELTS

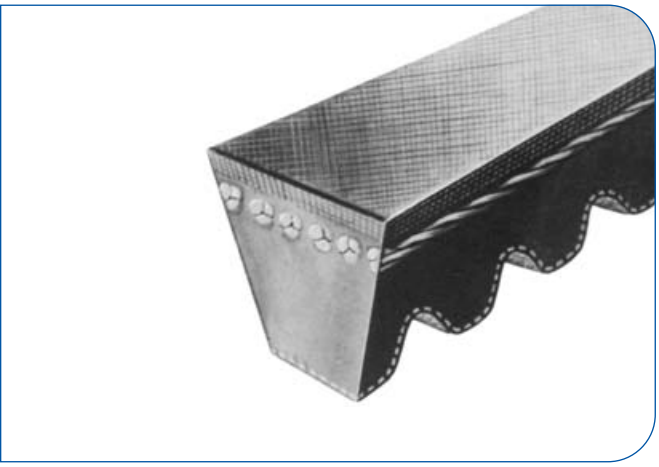

DID YOU KNOW THAT...

- A raw edge, cogged construction further increases the effective power transmission of narrow V-belts

"3VX" SECTION

(3/8-INCH TOP WIDTH, 5/16-INCH THICK)

Belt No.	List Price $	Approx. Weight (lbs)
3VX250	15.60	.10
3VX265	16.00	.10
3VX280	16.40	.10
(3VX290)	16.60	.10
3VX300	16.80	.10
3VX315	17.60	.10
3VX335	18.00	.20
3VX355	18.80	.20
3VX375	19.20	.20

Belt No.	List Price $	Approx. Weight (lbs)
3VX390	20.00	.20
3VX400	20.40	.20
3VX425	21.20	.20
3VX450	22.00	.20
3VX475	22.80	.20
3VX500	23.20	.20
3VX520	23.70	.20
3VX530	24.00	.20
3VX560	24.80	.20

Belt No.	List Price $	Approx. Weight (lbs)
3VX600	26.00	.30
3VX630	26.80	.30
(3VX650)	27.40	.30
3VX670	28.00	.30
3VX710	29.60	.30
3VX750	31.20	.30
3VX800	33.20	.40
3VX850	35.60	.40
3VX900	38.40	.40

Belt No.	List Price $	Approx. Weight (lbs)
3VX950	40.40	.40
3VX1000	42.80	.40
3VX1060	45.20	.50
3VX1120	49.20	.50
3VX1180	52.40	.60
3VX1250	56.00	.60
3VX1320	59.20	.70
3VX1400	62.80	.70

"5VX" SECTION

(5/8-INCH TOP WIDTH, 17/32-INCH THICK)

Belt No.	List Price $	Approx. Weight (lbs)
(5VX470)	49.20	.60
5VX500	49.20	.60
5VX530	51.20	.70
5VX560	53.60	.70
(5VX570)	53.10	.70
5VX600	58.00	.70
5VX630	60.80	.70
5VX650	62.80	.80
5VX660	63.80	.80
5VX670	64.80	.80

Belt No.	List Price $	Approx. Weight (lbs)
5VX680	65.80	.80
5VX690	66.80	.80
5VX710	68.80	.80
5VX730	70.80	.80
5VX750	72.80	.80
(5VX780)	75.70	.90
5VX800	77.60	.90
5VX850	83.60	.90
5VX900	86.80	1.00
5VX950	93.20	1.10

Belt No.	List Price $	Approx. Weight (lbs)
(5VX960)	94.20	1.10
5VX1000	98.40	1.20
(5VX1030)	101.40	1.20
5VX1060	104.40	1.20
(5VX1080)	110.40	1.20
5VX1120	110.40	1.30
(5VX1150)	113.40	1.40
5VX1180	116.40	1.40
5VX1230	121.50	1.50

Belt No.	List Price $	Approx. Weight (lbs)
5VX1250	123.60	1.50
5VX1320	130.40	1.60
5VX1400	137.60	1.70
5VX1500	148.00	1.80
5VX1600	158.00	1.90
5VX1700	168.00	2.00
5VX1800	178.40	2.10
5VX1900	188.80	2.30
5VX2000	199.20	2.40

( ) = Not in stock. Contact Baldor for price and delivery.

SYNCHRONOUS BELTS: TRAPEZOIDAL

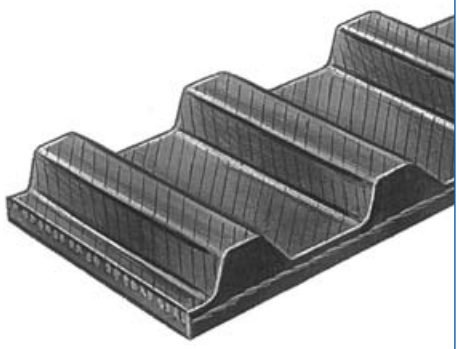

DID YOU KNOW THAT...

- Trapezoidal belts have fiberglass tension members and neoprene body with nylon covered teeth, all bonded together for maximum strength
- Stock trapezoidal synchronous belts are listed on the following pages. For non-stock widths, specified widths from our large supply of belt sleeves are available on special order.
- Mini-pitch MXL (.080-inch pitch) trapezoidal synchronous belts are also available.

HOW TO ORDER

EXAMPLE: **TB270XL037**

TB	270	XL	037

TB: TIMING BELT
270: BELT PITCH LENGTH (27.0)
XL: TOOTH PITCH (1/5")
037: BELT WIDTH

XL - EXTRA LIGHT 1/5" PITCH

Belt Length & Pitch Code	No. of Teeth	Width 037 (3/8") List Price $	Width 037 (3/8") Approx. Weight (lbs.)
60XL	30	7.68	0.009
70XL	35	8.00	0.011
80XL	40	8.24	0.012
90XL	45	8.48	0.014
100XL	50	8.72	0.015
110XL	55	9.04	0.017
120XL	60	9.20	0.019
130XL	65	9.52	0.02
140XL	70	9.76	0.022
142XL	71	9.80	0.023
150XL	75	10.00	0.023
160XL	80	10.32	0.025
170XL	85	10.48	0.026
178XL	89	10.74	0.028
180XL	90	10.80	0.028
190XL	95	11.04	0.029
194XL	97	11.28	0.03
200XL	100	11.28	0.031
210XL	105	11.52	0.032
220XL	110	11.84	0.034
230XL	115	12.00	0.035
240XL	120	12.52	0.037
250XL	125	12.56	0.039
260XL	130	12.80	0.04
270XL	135	13.16	0.041
344XL	172	14.96	0.051

L- LIGHT 3/8" PITCH

Belt Length & Pitch Code	No. of Teeth	Width 050 (1/2") List Price $	Width 050 (1/2") Approx. Weight (lbs.)	Width 075 (3/4") List Price $	Width 075 (3/4") Approx. Weight (lbs.)	Width 100 (1") List Price $	Width 100 (1") Approx. Weight (lbs.)
124L	33	15.36	.02	21.84	.05	28.00	.07
135L	36	POR	.02	POR	.05	POR	.07
150L	40	16.96	.03	24.24	.05	31.20	.07
165L	44	17.44	.03	25.04	.06	32.28	.08
173L	46	18.00	.03	25.84	.06	33.40	.08
187L	50	18.48	.04	26.64	.07	34.48	.09
202L	54	19.60	.04	28.24	.08	36.68	.09
210L	56	20.08	.04	29.04	.08	37.68	.09
225L	60	20.64	.05	29.84	.08	38.76	.10
236L	63	21.42	.06	31.04	.08	40.42	.10
240L	64	21.68	.06	31.44	.08	40.96	.12
244L	65	21.80	.06	31.64	.08	41.24	.12
255L	68	22.16	.06	32.24	.09	42.04	.12
270L	72	23.20	.06	33.84	.10	44.16	.13
285L	76	23.76	.07	34.72	.10	45.24	.14
300L	80	24.80	.07	36.24	.11	47.44	.14
320L	85	25.80	.07	37.80	.12	49.40	.15
322L	86	25.84	.07	37.92	.12	49.60	.15
345L	92	26.88	.08	39.52	.13	51.72	.16
367L	98	27.84	.08	41.12	.13	53.88	.17
390L	104	29.44	.09	43.52	.14	57.08	.18
405L	108	POR	.09	POR	.14	POR	.19
412L	110	POR	.10	POR	.15	POR	.20
420L	112	30.96	.10	45.92	.15	60.36	.20
424L	113	31.16	.11	46.24	.16	60.76	.22
450L	120	32.56	.11	48.40	.16	63.56	.22
454L	121	32.76	.11	48.70	.16	63.98	.22
480L	128	34.16	.12	50.80	.17	66.84	.23
510L	136	35.20	.12	52.40	.18	69.04	.24
525L	140	POR	.12	POR	.19	POR	.25
540L	144	37.28	.13	55.60	.20	73.32	.26
600L	160	40.40	.13	60.48	.21	79.80	.28
660L	178	43.52	.14	66.52	.23	87.78	.29
728L	194	POR	.15	POR	.25	POR	.30
817L	218	53.60	.18	80.40	.29	107.20	.36
915L	244	POR	.20	POR	.32	POR	.40

P.O.R. = Price on request

H - HEAVY 1/2" PITCH

Belt Length & Pitch Code	No. of Teeth	Width									
		075 (3/4")		100 (1")		150 (1-1/2")		200 (2")		300 (3")	
		List Price $	Approx. Weight (lbs.)	List Price $	Approx. Weight (lbs.)	List Price $	Approx. Weight (lbs.)	List Price $	Approx. Weight (lbs.)	List Price $	Approx. Weight (lbs.)
240H	48	32.56	.13	42.00	.20	60.72	.28	79.52	.41	117.04	.56
255H	51	33.80	.14	43.64	.21	63.24	.30	82.80	.42	122.00	.60
270H	54	35.04	.15	45.28	.21	65.76	.31	86.08	.43	126.96	.63
300H	60	37.52	.17	48.64	.23	70.72	.35	92.72	.47	136.88	.70
330H	66	40.08	.19	51.92	.25	75.68	.38	99.36	.51	146.80	.77
335H	67	40.50	.19	52.48	.25	76.50	.38	100.46	.52	148.44	.78
350H	70	41.76	.20	54.16	.27	78.96	.40	103.76	.55	153.36	.82
360H	72	42.56	.20	55.28	.28	80.64	.42	106.00	.56	156.72	.84
370H	74	43.42	.21	56.38	.29	82.30	.43	108.20	.57	159.18	.87
375H	75	43.84	.21	56.92	.29	83.12	.43	109.28	.58	161.64	.88
390H	78	45.04	.22	58.56	.30	85.60	.45	112.56	.61	166.64	.91
400H	80	45.92	.23	59.68	.31	87.28	.47	114.80	.63	169.92	.93
420H	84	47.52	.24	61.92	.32	90.56	.49	119.20	.65	176.56	.98
450H	90	50.08	.25	65.20	.35	95.52	.52	125.84	.70	186.40	1.05
480H	96	52.56	.27	68.56	.37	100.48	.56	132.40	.72	196.32	1.12
490H	98	53.36	.27	69.68	.37	102.16	.56	134.64	.72	199.68	1.12
510H	102	54.24	.28	70.80	.39	103.84	.59	136.88	.79	202.96	1.18
540H	108	57.52	.30	75.20	.41	110.48	.63	145.68	.84	216.16	1.25
560H	112	POR	.32	POR	.44	POR	.66	POR	.89	POR	1.32
570H	114	59.20	.32	77.44	.44	113.76	.66	150.08	.89	222.80	1.32
585H	117	POR	.34	POR	.46	POR	.70	POR	.93	POR	1.40
600H	120	62.56	.34	81.84	.46	120.40	.70	158.88	.93	236.00	1.40
630H	126	64.24	.35	84.08	.48	123.68	.73	163.28	.98	242.64	1.47
660H	132	67.52	.37	88.48	.51	130.32	.77	172.12	1.02	255.84	1.54
700H	140	70.88	.39	92.88	.54	136.96	.81	180.96	1.09	269.04	1.64
725H	145	72.56	.41	95.12	.56	140.24	.84	185.36	1.12	275.68	1.75
730H	146	72.90	.41	95.56	.57	140.92	.85	186.24	1.13	277.00	1.77
750H	150	74.24	.42	97.36	.58	143.60	.87	189.76	1.16	282.24	1.87
800H	160	79.20	.45	104.00	.61	150.24	.93	203.04	1.24	302.08	1.93
850H	170	82.56	.48	108.40	.65	160.16	.99	211.84	1.32	315.28	1.99
900H	180	87.52	.51	115.04	.69	170.08	1.04	225.04	1.40	335.12	2.10
1000H	200	95.92	.56	126.08	.77	186.64	1.16	247.12	1.55	368.16	2.32
1100H	220	104.24	.59	137.12	.84	203.20	1.27	269.20	1.71	401.20	2.57
1120H	224	POR	.60	POR	.86	POR	1.30	POR	1.74	POR	2.62
1140H	228	POR	.62	POR	.87	POR	1.32	POR	1.77	POR	2.66
1150H	230	POR	.63	POR	.88	POR	1.33	POR	1.79	POR	2.69
1250H	250	116.80	.70	153.76	.96	228.08	1.46	302.24	1.94	450.80	2.92
1400H	280	129.28	.79	170.32	1.07	252.88	1.62	335.36	2.17	500.32	3.24
1700H	340	154.32	.95	203.52	1.30	302.56	1.95	401.52	2.63	599.44	3.95
2010H	402	POR	1.12	POR	1.54	POR	2.31	POR	3.11	POR	4.67
2360H	472	POR	1.32	POR	1.80	POR	2.71	POR	3.65	POR	5.48

P.O.R. = Price on request

SYNCHRONOUS BELTS: CURVILINEAR

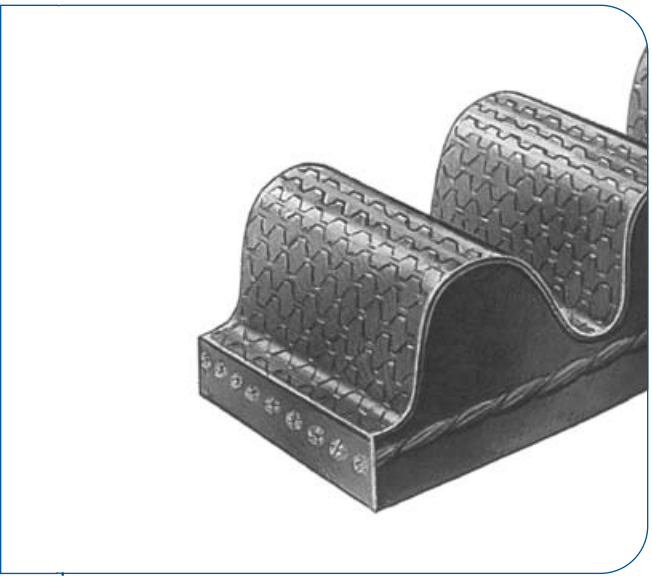

The standard trapezoidal tooth timing belt design performs poorly in high torque applications and high power drives at lower speeds. To overcome this disadvantage the curvilinear belt was developed using a more efficient tooth profile.

DID YOU KNOW THAT...

- Our stock 8mm and 14mm curvilinear synchronous belts are listed on the following pages. Non-standard lengths in these pitches are also available, as are belts with 3mm and 5mm pitch.
- Higher torque transmission at low speeds
- High power transmission over a wide speed range
- Improved meshing to reduce tooth jump
- Higher resistance to tooth shear
- Less tooth wear due to friction

HOW TO ORDER

EXAMPLE: **HTB13048M020**

HTB	1304	8M	020

HTB: HIGH TORQUE BELT
1304: BELT PITCH LENGTH (1304mm)
8M: TOOTH PITCH (8mm)
020: BELT WIDTH (20mm)

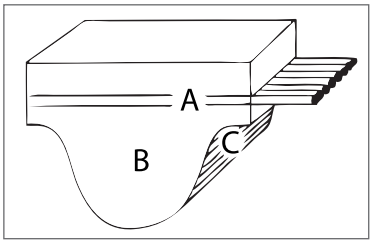

A. A high-modulus fiberglass cord is wound across the entire width of the belt pitch line insuring minimal stretch and resistance to repeated flexing.

B. The body is a synthetic neoprene compounded to resist flex fatigue, heat, ozone, mineral lubricating oils and aging.

C. A tough nylon fabric is bonded to the tooth surface for wear resistance.

8MM

Belt Length & Pitch Code	No. of Teeth	Width(mm)							
		020		030		050		085	
		List Price	Approx. Weight (lbs.)	List Price	Approx. Weight (lbs.)	List Price	Approx. Weight (lbs.)	List Price	Approx. Weight (lbs.)
376-8M	47	25.56	.10	36.00	.16	57.40	.27	95.40	.45
424-8M	53	25.56	.11	36.00	.18	57.40	.30	95.40	.50
472-8M	59	P.O.R.	.12	P.O.R.	.20	P.O.R.	.33	P.O.R.	.55
480-8M	60	25.56	.13	36.00	.20	57.40	.34	95.40	.57
536-8M	67	26.40	.14	37.60	.23	60.20	.38	100.40	.63
560-8M	70	27.60	.16	39.40	.23	63.00	.39	104.80	.66
600-8M	75	29.00	.17	41.60	.25	66.60	.42	111.00	.71
624-8M	78	29.30	.18	41.90	.26	67.36	.43	112.36	.74
632-8M	79	29.40	.18	42.00	.27	67.60	.44	112.80	.75
640-8M	80	29.80	.18	42.60	.27	68.40	.45	114.20	.76
656-8M	82	30.24	.18	43.24	.28	69.52	.46	116.08	.78
720-8M	90	32.00	.20	45.80	.30	74.00	.50	123.60	.85
776-8M	97	34.10	.21	49.02	.32	79.18	.54	132.42	.93
784-8M	98	34.40	.21	49.48	.32	79.92	.55	133.68	.94
800-8M	100	35.00	.22	50.40	.33	81.40	.56	136.20	.96
840-8M	105	36.10	.24	52.00	.35	84.20	.58	140.90	.99
880-8M	110	37.20	.25	53.60	.37	87.00	.61	145.60	1.05
912-8M	114	38.08	.26	54.88	.38	89.24	.63	149.36	1.09
920-8M	115	38.30	.26	55.20	.38	89.80	.64	150.30	1.10
960-8M	120	39.40	.27	56.80	.40	92.60	.67	155.00	1.14
1040-8M	130	41.60	.29	60.20	.43	98.00	.74	164.40	1.24
1120-8M	140	43.80	.31	63.40	.47	103.60	.78	173.80	1.33
1152-8M	144	46.20	.34	66.80	.50	109.20	.84	183.20	1.46
1200-8M	150	46.20	.34	66.80	.50	109.20	.84	183.20	1.42
1224-8M	153	47.30	.35	68.40	.51	112.00	.85	187.90	1.45
1280-8M	160	48.40	.36	70.00	.53	114.80	.89	192.60	1.51
1304-8M	163	49.06	.37	71.00	.54	116.46	.91	195.52	1.54
1328-8M	166	49.72	.37	71.98	.55	118.10	.93	198.24	1.57
1360-8M	170	50.60	.38	73.30	.57	120.30	.95	202.00	1.61
1424-8M	178	52.36	.40	75.94	.59	124.70	1.00	209.52	1.69
1440-8M	180	52.80	.40	76.60	.60	125.80	1.01	211.40	1.71
1600-8M	200	57.40	.45	83.20	.67	137.00	1.11	230.40	1.90
1760-8M	220	61.80	.49	89.80	.73	148.00	1.23	249.00	2.07
1800-8M	225	63.20	.50	91.80	.75	151.80	1.25	255.40	2.12
2000-8M	250	69.20	.56	100.60	.83	166.60	1.39	280.40	2.36
2104-8M	263	72.20	.60	112.80	.88	174.00	1.50	292.60	2.45
2248-8M	281	76.48	.64	115.42	.94	184.78	1.58	311.06	2.63
2400-8M	300	81.00	.68	118.20	1.00	196.20	1.66	330.60	2.82
2600-8M	325	87.60	.74	127.20	1.08	213.40	1.80	356.80	3.06
2800-8M	350	93.00	.80	135.60	1.16	225.80	1.92	380.92	3.29
4400-8M	550	141.60	1.25	201.60	1.32	343.20	3.01	590.60	5.16

P.O.R. = Price on request

14MM

Belt Length & Pitch Code	No. of Teeth	Width(mm)									
		040		055		085		115		170	
		List Price	Approx. Weight (lbs.)	List Price	Approx. Weight (lbs.)	List Price	Approx. Weight (lbs.)	List Price	Approx. Weight (lbs.)	List Price	Approx. Weight (lbs.)
966-14M	69	187.00	.84	250.20	1.15	364.20	1.78	484.20	2.40	700.40	3.55
1190-14M	85	209.60	1.02	276.40	1.42	404.20	2.20	539.20	2.98	780.40	4.39
1400-14M	100	228.00	1.20	302.00	1.67	443.60	2.57	592.40	3.50	859.00	5.15
1610-14M	115	246.80	1.40	329.00	1.92	484.00	2.95	647.20	4.02	939.20	5.95
1778-14M	127	263.40	1.52	350.60	2.13	516.20	3.25	691.20	4.45	1003.20	6.55
1890-14M	135	276.60	1.62	368.80	2.25	544.00	3.49	728.80	4.73	1058.20	6.95
2100-14M	150	301.40	1.80	403.00	2.50	596.20	3.88	799.40	5.25	1161.60	7.75
2310-14M	165	321.00	2.00	429.20	2.75	636.00	4.26	852.80	5.75	1239.80	8.50
2450-14M	175	334.20	2.12	446.80	2.93	662.40	4.52	888.40	6.10	1292.00	9.00
2590-14M	185	350.40	2.25	469.40	3.10	696.20	4.78	934.00	6.45	1358.80	9.55
2800-14M	200	374.80	2.43	503.20	3.34	747.00	5.15	1002.40	7.00	1459.20	10.30
3150-14M	225	411.40	2.73	553.60	3.77	824.20	5.80	1107.20	7.85	1614.40	11.60
3360-14M	240	430.80	2.90	581.40	4.02	865.40	6.20	1163.40	8.35	1696.80	12.35
3500-14M	250	444.20	3.00	599.60	4.19	893.00	6.45	1201.60	8.75	1751.40	12.90
3850-14M	275	489.00	3.30	666.20	4.60	989.40	7.10	1331.60	9.62	1937.00	14.20
4326-14M	309	543.20	3.70	734.40	5.17	1098.80	8.00	1480.00	10.80	2161.60	15.95
4578-14M	327	574.00	3.92	778.80	5.48	1159.60	8.45	1566.00	11.40	2245.00	16.90

CROSS REFERENCE LISTING

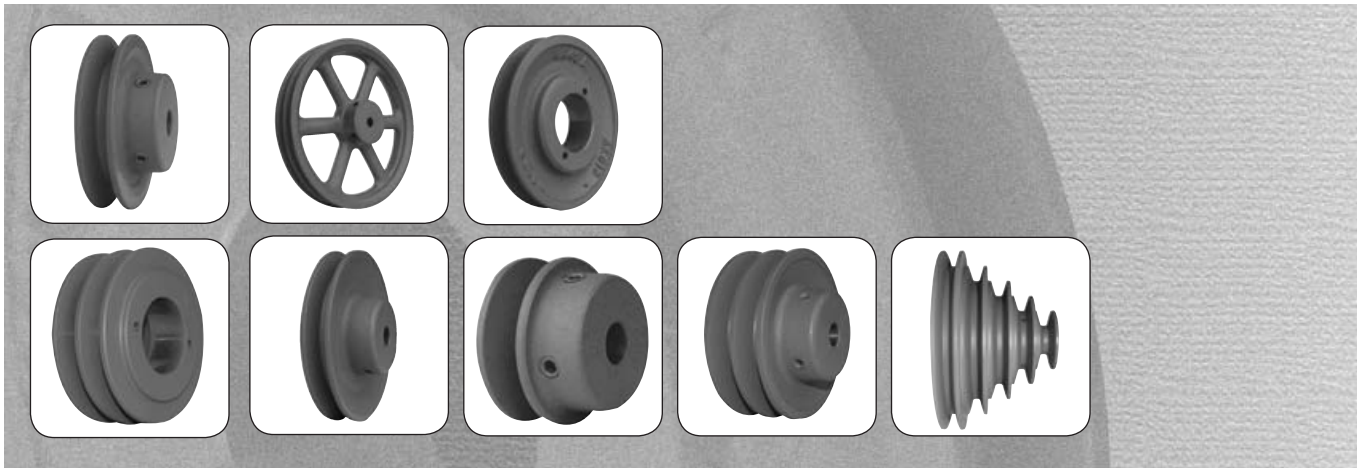

You can quickly and easily find matches for most competitor part numbers in the Baldor•Maska e-CATALOG and Baldor VIP 3.0 on-line site.

www.maskapulleys.com

A or 4L

1 & 2 Groove Variable Pulleys Cross-Over
Maska vs Browning

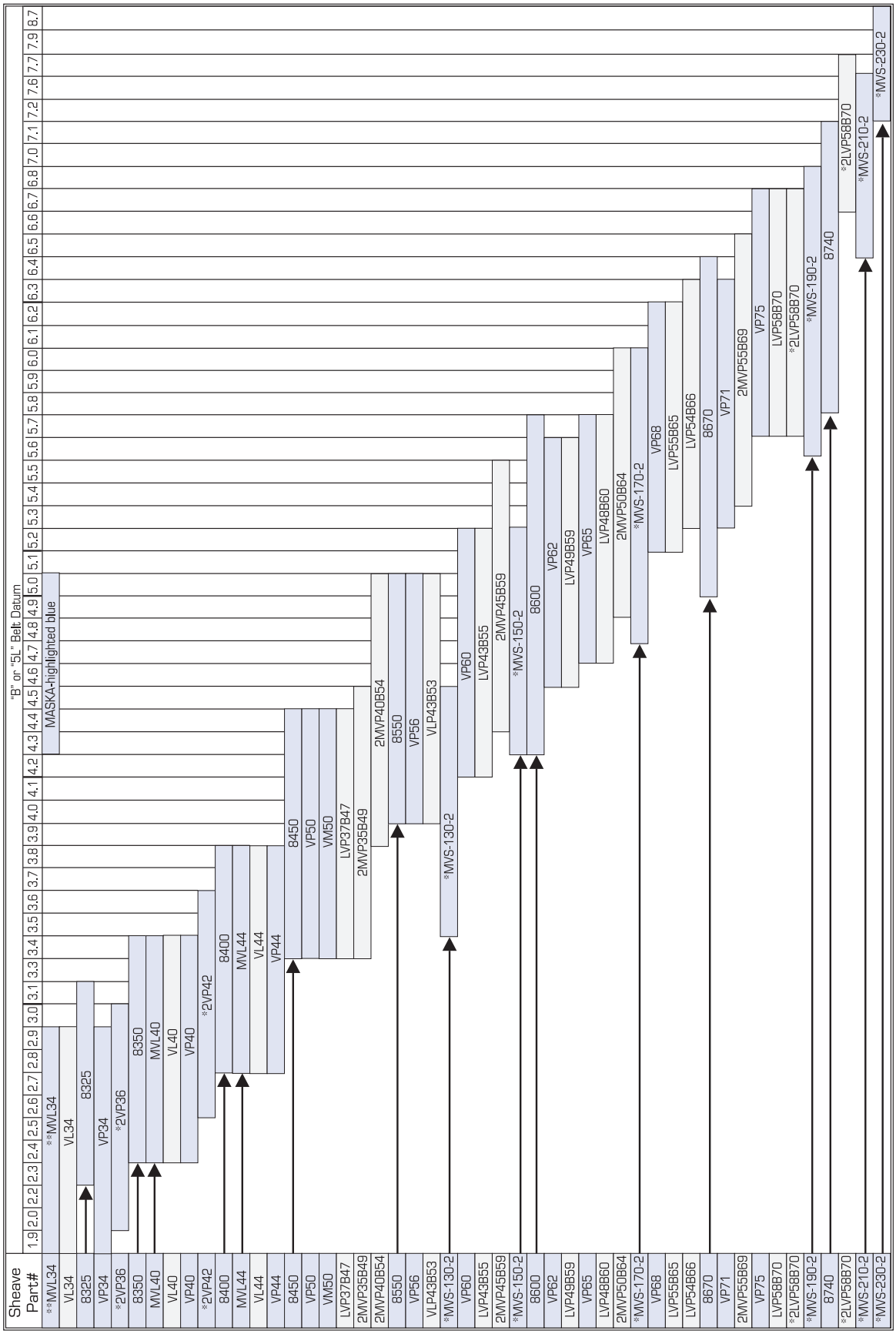

Note: For double groove sheaves, add a "D" before the MASKA 8000 series and 2 before VP series
* only available in 2 grooves ** only available in 1 groove

BALDOR
A MEMBER OF THE ABB GROUP

B or 5L

1 & 2 Groove Variable Pulleys Cross-Over
Maska vs Browning

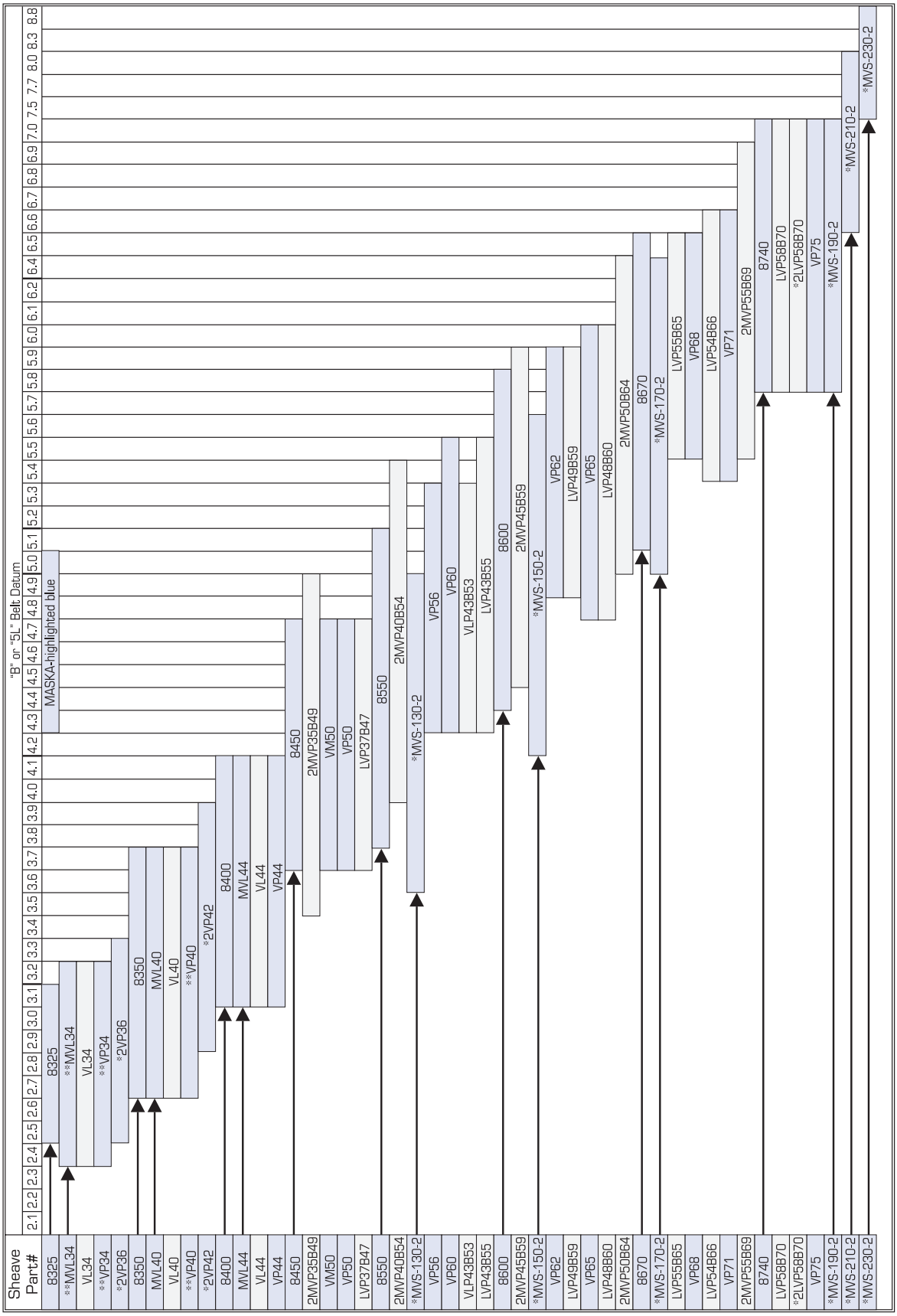

Note: For double groove sheaves, add a "D" before the MASKA 8000 series and 2 before VP series
* only available in 2 grooves ** only available in 1 groove

CROSS REFERENCES

H.V.A.C. VARIABLE F.H.P.

VARIABLE LIGHT DUTY

Cross Ref.	MASKA
VL 25	MVL 25
VL 30	MVL 30
VL 34	MVL 34
VL 40	MVL 40
VL 44	MVL 44

FRACTIONAL FIXED BORE A GROOVE

Cross Ref.	MASKA
AL 54	MFAL 54
AL 64	MFAL 64
AL 74	MFAL 74
AL 84	MFAL 84
AL 94	MFAL 94
AL 104	MFAL 104
AL 114	MFAL 114
AL 124	MFAL 124
AM 144	MFAM 144

VARIABLE PITCH INTEGRAL VP-2VP/8000 SERIES

MASKA

V-BELT SHEAVE SINGLE GROOVE	
1VP 34	8325
1VP 40	8350
1VP 44	8400
1VP 50	8450
1VP 56	8550
1VP60/1VP62/1VP65	8600
1VP 68/1VP71	8670
1VP 75	8740

V-BELT SHEAVE DOUBLE GROOVE	
2VP 36	D8350
2VP 42	D8400
2VP 50	D8450
2VP 56	D8550
2VP60/1VP62/1VP65	D8600
2VP 68/1VP71	D8670
2VP 75	D8740

MVS ADJUSTABLE SPEED

Cross Ref.	MASKA
JVS 130	MVS 130
JVS 150	MVS 150
JVS 170	MVS 170
JVS 190	MVS 190
JVS 210	MVS 210
JVS 230	MVS 230

CAPABILITIES FOR LARGE PARTS

Baldor specializes in large sheaves, bushings & HTD sprockets for a variety of heavy-duty industries. Here is a sampling of some recent orders:

12 groove - 8V 98" Sheaves

Industry: Mining Equipment

60" split hub Sheave

Industry: Mining equipment

W Bushing

Industry: Con-Ag & Oilfield

HTD Sprocket - 37.78"

Industry: Sawmills

12 groove- 8V 81" Sheave

Industry: Mudpumps

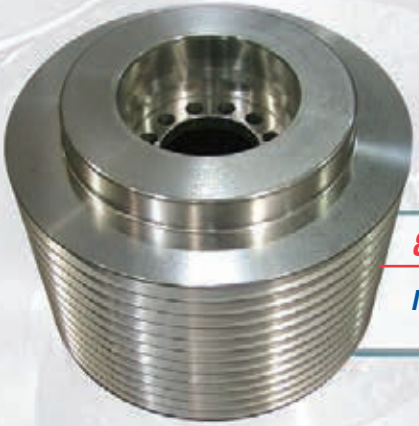

8V 21.2"- GE 752 Series

Industry: Mudpumps

Baldor can assist you in choosing and designing the best parts for your drive's needs
- contact our Technical Sales people for a detailed analysis based on your specifications.

BALDOR•MASKA® SALES OFFICES

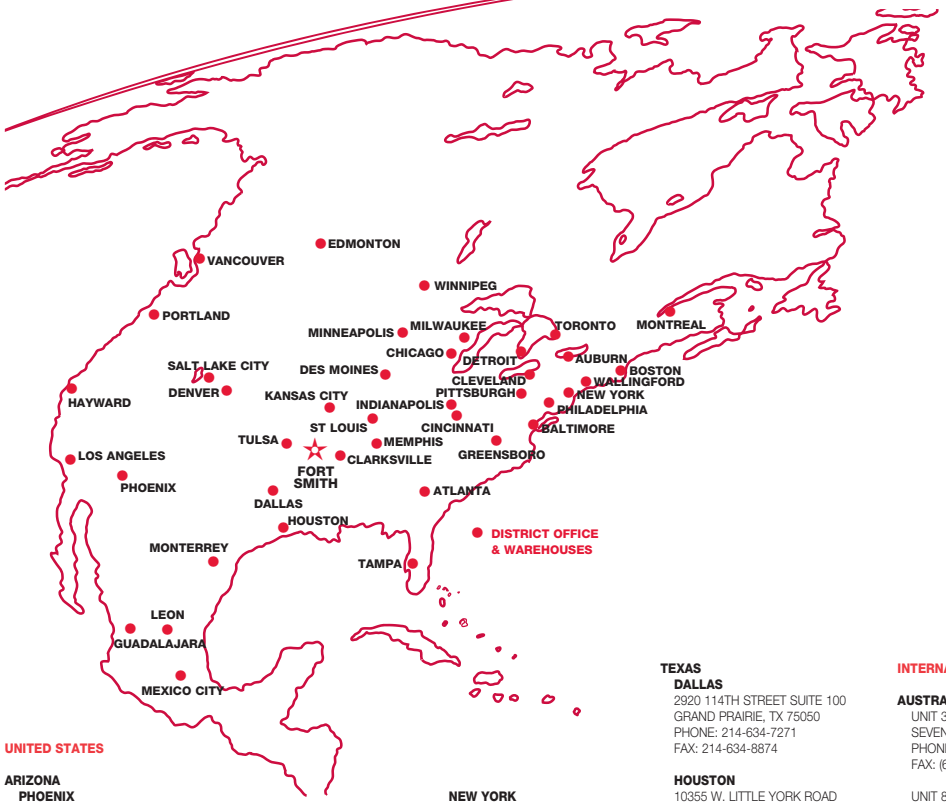

UNITED STATES

ARIZONA
PHOENIX
4211 S 43RD PLACE
PHOENIX, AZ 85040
PHONE: 602-470-0407
FAX: 602-470-0464

ARKANSAS
CLARKSVILLE
1001 COLLEGE AVENUE
CLARKSVILLE, AR 72830
PHONE: 479-754-9108
FAX: 479-754-9205

CALIFORNIA
LOS ANGELES
6480 FLOTILLA STREET
COMMERCE, CA 90040
PHONE: 323-724-6771
FAX: 323-721-5859

HAYWARD
21056 FORBES AVENUE
HAYWARD, CA 94545
PHONE: 510-785-9900
FAX: 510-785-9910

COLORADO
DENVER
3855 FOREST STREET
DENVER, CO 80207
PHONE: 303-623-0127
FAX: 303-595-3772

CONNECTICUT
WALLINGFORD
65 SOUTH TURNPIKE ROAD
WALLINGFORD, CT 06492
PHONE: 203-269-1354
FAX: 203-269-5485

FLORIDA
TAMPA/PUERTO RICO/ VIRGIN ISLANDS
3906 EAST 11TH AVENUE
TAMPA, FL 33605
PHONE: 813-248-5078
FAX: 813-247-2984

GEORGIA
ATLANTA
62 TECHNOLOGY DRIVE
ALPHARETTA, GA 30005
PHONE: 770-772-7000
FAX: 770-772-7200

ILLINOIS
CHICAGO
340 REMINGTON BLVD.
BOLINGBROOK, IL 60440
PHONE: 630-296-1400
FAX: 630-226-9420

INDIANA
INDIANAPOLIS
5525 W. MINNESOTA STREET
INDIANAPOLIS, IN 46241
PHONE: 317-246-5100
FAX: 317-246-5110

IOWA
DES MOINES
1943 HULL AVENUE
DES MOINES, IA 50313
PHONE: 515-263-6929
FAX: 515-263-6515

MARYLAND
BALTIMORE
6660 SANTA BARBARA RD.
SUITES 22-24
ELKRIDGE, MD 21075
PHONE: 410-579-2135
FAX: 410-579-2677

MASSACHUSETTS
BOSTON
6 PULLMAN STREET
WORCESTER, MA 01606
PHONE: 508-854-0708
FAX: 508-854-0291

MICHIGAN
DETROIT
5993 PROGRESS DRIVE
STERLING HEIGHTS, MI 48312
PHONE: 586-978-9800
FAX: 586-978-9969

MINNESOTA
MINNEAPOLIS
21080 134TH AVENUE NORTH
ROGERS, MN 55374
PHONE: 763-428-3633
FAX: 763-428-4551

MISSOURI
ST LOUIS
13678 LAKEFRONT DRIVE
EARTH CITY, MO 63045
PHONE: 314-373-3032
FAX: 314-373-3038

KANSAS CITY
1501 BEDFORD AVENUE
NORTH KANSAS CITY, MO 64116
PHONE: 816-587-0272
FAX: 816-587-3735

NEW YORK
AUBURN
ONE ELLIS DRIVE
AUBURN, NY 13021
PHONE: 315-255-3403
FAX: 315-253-9923

NORTH CAROLINA
GREENSBORO
1220 ROTHERWOOD ROAD
GREENSBORO, NC 27406
PHONE: 336-272-6104
FAX: 336-273-6628

OHIO
CINCINNATI
2929 CRESCENTVILLE ROAD
WEST CHESTER, OH 45069
PHONE: 513-771-2600
FAX: 513-772-2219

CLEVELAND
8929 FREEWAY DRIVE
MACEDONIA, OH 44056
PHONE: 330-468-4777
FAX: 330-468-4778

OKLAHOMA
TULSA
5555 E. 71ST ST., SUITE 9100
TULSA, OK 74136
PHONE: 918-366-9320
FAX: 918-366-9338

OREGON
PORTLAND
12651 SE CAPPS ROAD
CLACKAMAS, OR 97015
PHONE: 503-691-9010
FAX: 503-691-9012

PENNSYLVANIA
PHILADELPHIA
1035 THOMAS BUSCH
MEMORIAL HIGHWAY
PENNSAUKEN, NJ 08110
PHONE: 856-661-1442
FAX: 856-663-6363

PITTSBURGH
159 PROMINENCE DRIVE
NEW KENSINGTON, PA 15068
PHONE: 724-889-0092
FAX: 724-889-0094

TENNESSEE
MEMPHIS
4000 WINCHESTER ROAD
MEMPHIS, TN 38118
PHONE: 901-365-2020
FAX: 901-365-3914

TEXAS
DALLAS
2920 114TH STREET SUITE 100
GRAND PRAIRIE, TX 75050
PHONE: 214-634-7271
FAX: 214-634-8874

HOUSTON
10355 W. LITTLE YORK ROAD
SUITE 300
HOUSTON, TX 77041
PHONE: 281-977-6500
FAX: 281-977-6510

UTAH
SALT LAKE CITY
2230 SOUTH MAIN STREET
SALT LAKE CITY, UT 84115
PHONE: 801-832-0127
FAX: 801-832-8911

WISCONSIN
MILWAUKEE
1960 SOUTH CALHOUN ROAD
NEW BERLIN, WI 53151
PHONE: 262-784-5940
FAX: 262-784-1215

INTERNATIONAL SALES
FORT SMITH, AR
P.O. BOX 2400
FORT SMITH, AR 72902
PHONE: 479-646-4711
FAX: 479-648-5895

CANADA

EDMONTON, ALBERTA
4053-92 STREET
EDMONTON, ALBERTA T6E 6R8
PHONE: 780-434-4900
FAX: 780-438-2600

TORONTO
OAKVILLE, ONTARIO
2750 COVENTRY ROAD
OAKVILLE, ONTARIO L6H 6R1
PHONE: 905-829-3301
FAX: 905-829-3302

MONTREAL, QUEBEC
5155 J-ARMAND BOMBARDIER
SAINT-HUBERT, QUÉBEC
CANADA J3Z 1G4
PHONE: 514-933-2711
FAX: 514-933-8639

VANCOUVER, BRITISH COLUMBIA
1538 KEBET WAY
PORT COQUITLAM,
BRITISH COLUMBIA V3C 5M5
PHONE 604-421-2822
FAX: 604-421-3113

WINNIPEG, MANITOBA
54 PRINCESS STREET
WINNIPEG, MANITOBA R3B 1K2
PHONE: 204-942-5205
FAX: 204-956-4251

INTERNATIONAL

AUSTRALIA
UNIT 3, 6 STANTON ROAD
SEVEN HILLS, NSW 2147, AUSTRALIA
PHONE: (61) (2) 9674 5455
FAX: (61) (2) 9674 2495

UNIT 8, 5 KELLETTS ROAD
ROWVILLE, VICTORIA, 3178 AUSTRALIA
PHONE: (61) (3) 9753 4355
FAX: (61) (3) 9753 4366

EL SALVADOR
RESIDENCIAL PINARES DE SUIZA
POL. 15 #44,
NVA. SAN SALVADOR, EL SALVADOR
PHONE: +503 2288-1519
FAX: +503 2288-1518

CHILE
ALCÁNTARA 200, FLOOR 8,
POSTAL CODE 7550159, LAS CONDES,
SANTIAGO, CHILE
PHONE: (56)-(2)-6514707

CHINA
160 SONG SHENG ROAD
SONGJIANG INDUSTRY ZONE
SHANGHAI 201613, CHINA
PHONE: +86 21 5760 5335
FAX : +86 21 5760 5336

GERMANY
HERMANN-HEINRICH - GOSSEN 3
50858 KOLN, GERMANY
PHONE: 49-2234379410
FAX: 49-22343794164

DIESELSTRASSE 22
D-85551 KIRCHHEIM
MUNICH, GERMANY
PHONE: +49 89 90 5080
FAX: +49 89 90 50 8492

INDIA
14, COMMERCE AVENUE
MAHAGANESH COLONY
PAUD ROAD
PUNE - 411038
MAHARASHTRA, INDIA
PHONE: +91 20 25 45 27 17 / 18
FAX: +91 20 25 45 27 19

INDONESIA
TALAVERA OFFICE PARK,
28TH FLOOR, SUITE M18
Jl. T.B. SIMATUPANG, KAV. 22-26
JAKARTA 12430, INDONESIA
PHONE: +62 21 7599 9879
FAX: + 62 21 7599 9878

ITALY
VIA SOTTOBISIO 30
BALERNA CH-6828
PHONE: +41 91 683 6161
FAX: +41 91 630 2633

JAPAN
DIA BLDG 802,
2-21-1 TSURUYA-CHO,
KANAGAWA-KU
YOKOHAMA, 221-0835, JAPAN
PHONE: 81-45-412-4506
FAX: 81-45-412-4507

MEXICO
LEON, GUANAJUATO
KM. 2.0 BLVD. AEROPUERTO
LEÓN 37545, GUANAJUATO, MÉXICO
PHONE: +52 477 761 2030
FAX: +52 477 761 2010

MIDDLE EAST & NORTH AFRICA
VSE INTERNATIONAL CORP.
P. O. BOX 5618
BUFFALO GROVE, IL 60089-5618
PHONE: 847 590 5547
FAX: 847 590 5587

PANAMA
AVE. RICARDO J. ALFARO
EDIFICIO SUN TOWERS MALL
PISO 2, LOCAL 55
CIUDAD DE PANAMÁ, PANAMÁ
PHONE: +507 236-5155
FAX: +507 236-0591

SINGAPORE
18 KAKI BUKIT ROAD 3, #03-09
ENTREPRENEUR BUSINESS CENTRE
SINGAPORE 415978
PHONE: (65) 6744 2572
FAX: (65) 6747 1708

SWITZERLAND
POSTFACH 73
SCHUTZENSTRASSE 59
CH-8245 FEUERTHALEN
SWITZERLAND
PHONE: +41 52 647 4700
FAX: +41 52 659 2394

TAIWAN
1F, NO 126 WENSHAN 3RD STREET,
NANTUN DISTRICT,
TAICHUNG CITY 408
TAIWAN R.O.C
PHONE: (886) 4 238 04235
FAX: (886) 4 238 04463

UNITED KINGDOM
6 BRISTOL DISTRIBUTION PARK
HAWKLEY DRIVE
BRISTOL BS32 0BF U.K.
PHONE: +44 1454 850000
FAX: +44 1454 859001

VENEZUELA
AV. ROMA. QTA EL MILAGRO. URB.
CALIFORNIA NORTE
CARACAS, 1070
VENEZUELA
PHONE/FAX: +58 212 272 7343
MOBILE: +58 414 114 8623

Catálogo también
disponible en Español

BALDOR
A MEMBER OF THE ABB GROUP

BALDOR ELECTRIC COMPANY
P.O. Box 2400 • Fort Smith, AR 72902-2400 U.S.A.
Ph: (479) 646-4711 • Fax (479) 648-5792 • International Fax (479) 648-5895
www.baldor.com • www.maskapulleys.com

© Baldor Electric Company
CA6000

Printed in the U.S.A.
01/12 TCP 10,000